Intelligent Microstepping Drive LS-143RJ

Doc # 712143001 / Rev C, 05/21/2019

Features

- **Output current 4A**
- **Motor power supply 48V**
- **Micro Stepping rates**
  1/2; 1/8; 1/10; 1/16; 1/20; 1/32; 1/64; 1/128
- **Position and Velocity motion profiles**
- **32-bit position, velocity and acceleration values**
- **Path point buffer for coordinated motion control**
- **Path point rate up to 2KHz**
- **Hardware stop input**
- **Forward and Reverse over travel inputs**
- **Safety bus**
- **Brake output**
- **Protected motor output**
- **Communication speed 19.2Kb/S to 1.25Mb/S**
- **Profile rate 2 KHz**
- **Command rate up to 1000/sec**

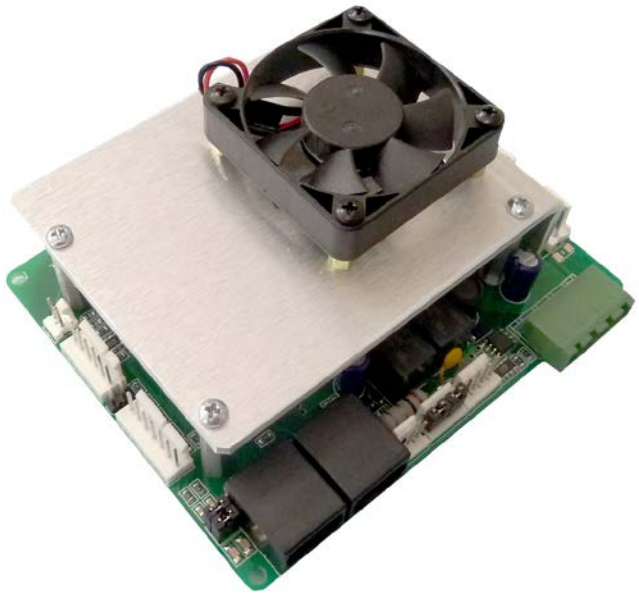

Description

LS-143RJ is a single axis intelligent micro stepping controller with integrated amplifier designed for applications using two phase stepper motors. The device is augmented with special features for supporting the coordinated motion of several motors.
LS-143RJ is a member of Logosol's distributed motion control network. Up to 31 intelligent micro stepping drives can be controlled over a multi-drop full duplex proprietary network. Standard RJ-45 connectors are used to connect modules into a network.
LS-143RJ is equipped with various safety features such as over travel limit switch inputs, hardware stop input. Safety bus can be connected for multi-drive system protection. The motor output current can be set by jumpers.

TECHNICAL SPECIFICATIONS rated at 25ºC ambient, POWER (+) = 48VDC

+POWER 24 to 48VDC	Motor power input 24VDC to 48VDC (50VDC absolute maximum)
+24V	I/O and Logic power supply 18VDC to 30VDC. Max.current 0.1A without Brake.
MAX MOTOR OUTPUT CURRENT	4A
MICRO STEP RESOLUTION	1/2; 1/8; 1/10; 1/16; 1/20; 1/32; 1/64; 1/128 (jumpers selectable)
MAX STEP RATE	200 KHz
SERIAL BAUD RATE	19.2Kb/Sec to 1.25 Mb/Sec
DIGITAL INPUTS Limit1, Limit2, Input10	-0.5V<LO<5V, 12V<HI<36V; Imax=4mA
DIGITAL OUTPUITS Brake	0.6A max. Open collector output with overvoltage clamp.
LED ORANGE and GREEN	Device Status
THERMAL REQUIREMENTS Storage temperature range Operating temperature range	 –30 to +85 ºC 0 to 45 ºC
MATING CONNECTORS POWER MOTOR BRAKE Safety Bus CN2 Safety Bus CN3 INPUT EXTERNAL DRIVER LIMITS +5V Source CN9 +5V Source CN10	 EM2565-05-H Terminal Block 5 Poles 5.08mm Molex 09-50-8053 housing with 08-52-0113 (5 pcs.) Molex 09-50-8033 housing with 08-52-0113 (2 pcs.) Molex 22-01-3047 housing with 08-50-0114 pins (4 pcs.) Molex 22-01-3047 housing with 08-50-0114 pins (4 pcs.) Molex 22-01-3037 housing with 08-50-0114 pins (3 pcs.) Molex 22-01-3077 housing with 08-50-0114 pins (7 pcs.) Molex 22-01-3067 housing with 08-50-0114 pins (6 pcs.) Molex 22-01-3027 housing with 08-50-0114 pins (2 pcs.) Molex 22-01-3027 housing with 08-50-0114 pins (2 pcs.)

ORDERING GUIDE

PART NUMBER	MODEL	DESCRIPTION
912143006	LS-143RJzS	Intelligent Stepper Drive for coordinated motion control
912143007	LS-143RJzSF	Intelligent Stepper Drive for coordinated motion control with Fan
230601083	LS-143RJ-CN	Mating connector kit

DIMENSIONAL DRAWINGS

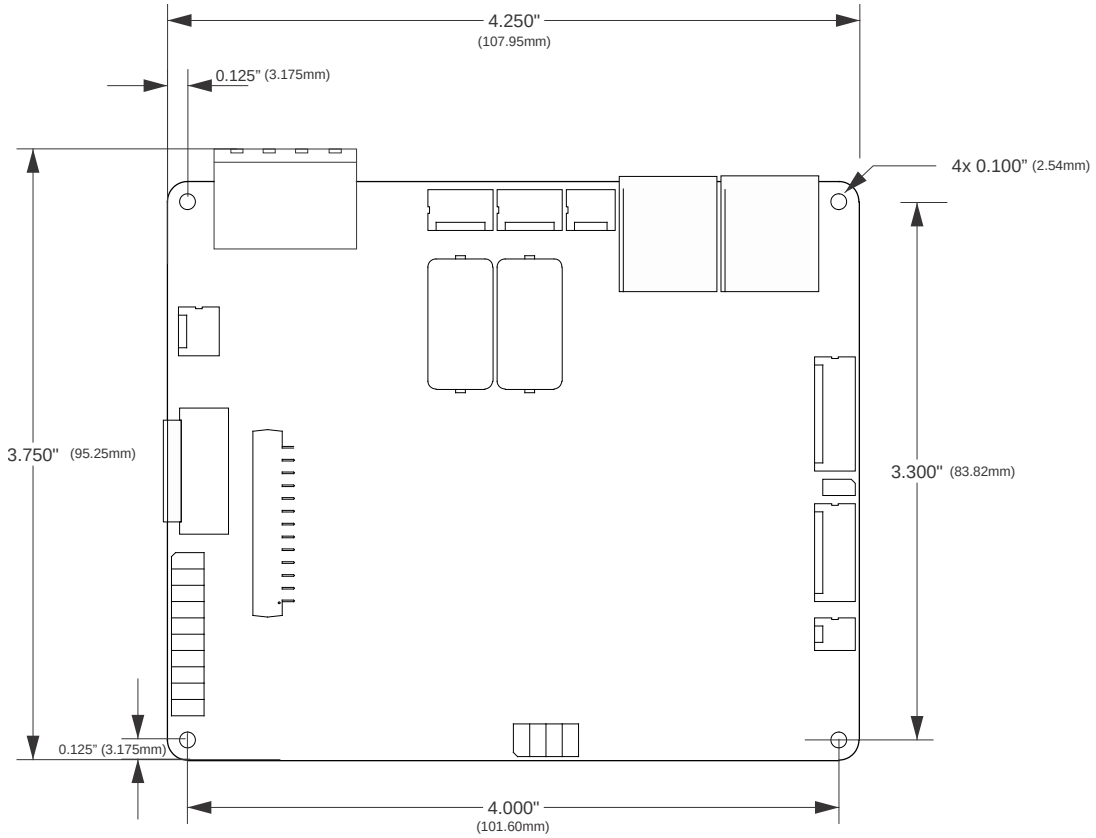

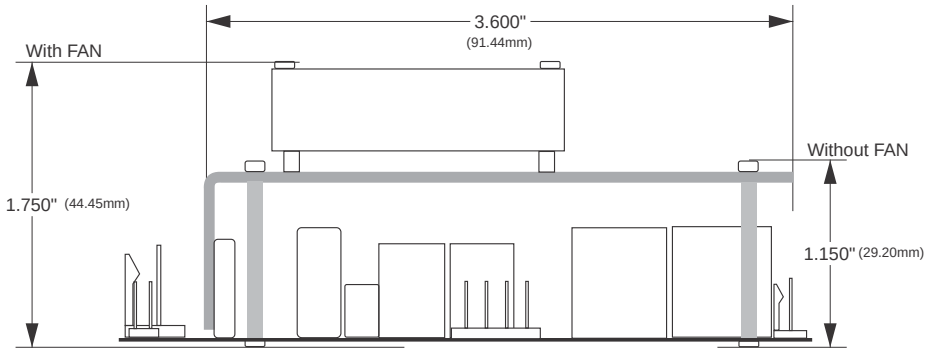

PINOUT

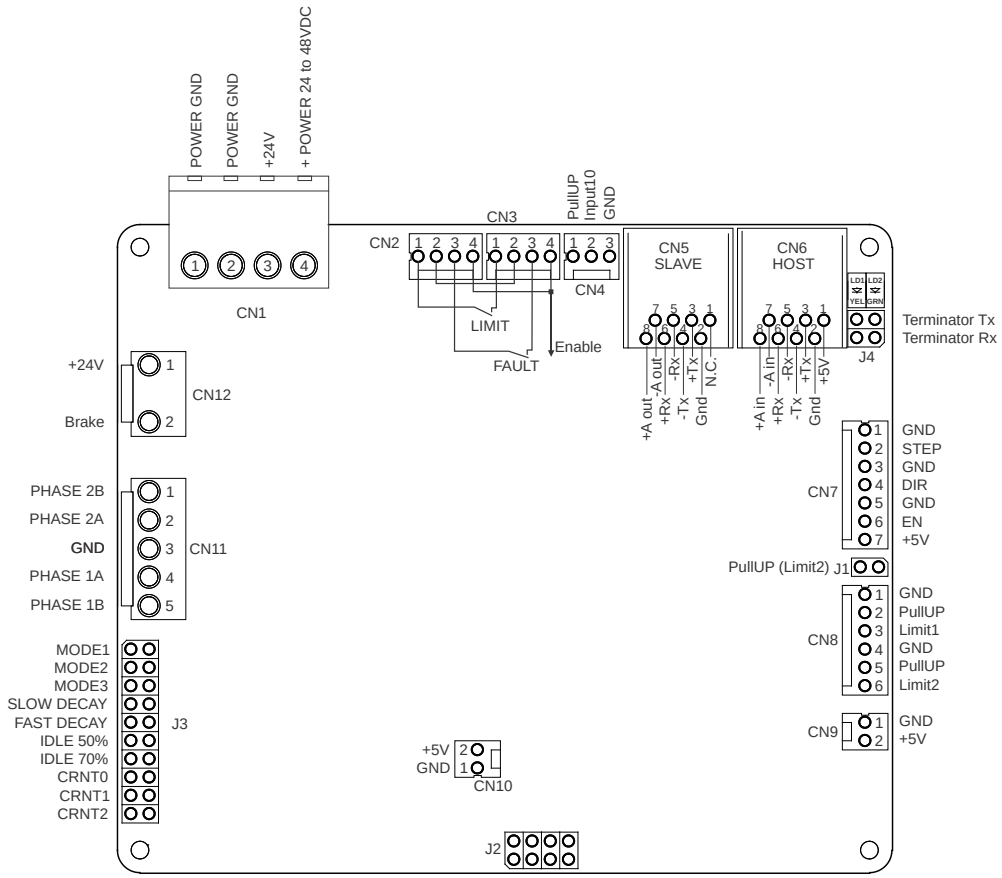

CN1 – POWER

PIN	SIGNAL	DESCRIPTION
1	POWER GND	Power ground
2	POWER GND	Power ground
3	+24V	Logic power supply input
4	+POWER 24 to 48VDC	Motor power supply input

SAFETY BUS

CN2

PIN	SIGNAL	DESCRIPTION
1	LIMIT	Limit relay contact (CN2)
2	LIMIT	Limit jumper wire – connected to CN3 pin2
3	FAULT	Fault relay contact (CN2)
4	Enable	Enable jumper wire connected to Drive Enable/$\overline{\text{Stop}}$ input

CN3

PIN	SIGNAL	DESCRIPTION
1	LIMIT	Limit relay contact (CN3)
2	LIMIT	Limit jumper wire – connected to CN2 pin2
3	FAULT	Fault relay contact (CN3)
4	Enable	Enable jumper wire connected to Drive Enable/$\overline{\text{Stop}}$ input

CN4 – INPUT

PIN	SIGNAL	DESCRIPTION
1	Pull-Up	Protected power output (+24V)
2	Input10	Multifunctional input (mode dependent)
3	GND	Signal ground

NETWORK
CN5 –SLAVE

PIN	SIGNAL	DESCRIPTION
1	N.C.	Not connected
2	Gnd	Interface ground
3	+Tx	(+) Transmit data
4	-Tx	(-) Transmit data
5	-Rx	(-) Receive data
6	+Rx	(+) Receive data
7	-A out	(-) Address output
8	+A out	(+) Address output

CN6 –HOST

PIN	SIGNAL	DESCRIPTION
1	+5V	RS-232 adapter power supply
2	Gnd	Interface ground
3	+Tx	(+) Transmit data
4	-Tx	(-) Transmit data
5	-Rx	(-) Receive data
6	+Rx	(+) Receive data
7	-A in	(-) Address input
8	+A in	(+) Address input

CN7 – EXTERNAL DRIVER

PIN	SIGNAL	DESCRIPTION
1	GND	Ground
2	STEP	Step pulse output 2µS 5V HCMOS output.
3	GND	Ground
4	DIR	Direction 5V HCMOS output. Setup time 2µS
5	GND	Ground
6	EN	5V HCMOS output .HIGH – External Stepper driver enabled
7	+5V	+5V source (1)

CN8 – LIMITS

PIN	SIGNAL	DESCRIPTION
1	GND	Ground
2	Pull-UP	+24VDC output
3	Limit1	Limit1 Sensor input. Pull up terminator is enabled when J1 jumper is installed.
4	GND	Ground
5	Pull-UP	+24VDC output
6	Limit2	Limit2 Sensor input

CN9 – +5V Source

PIN	SIGNAL	DESCRIPTION
1	GND	Ground
2	+5V	+5V source (1)

CN10 – +5V Source

PIN	SIGNAL	DESCRIPTION
1	GND	Ground
2	+5V	+5V source (1)

(1) 0.2A MAX for all outputs combined.

CN11 – MOTOR

PIN	SIGNAL	DESCRIPTION
1	PHASE 2B	Stepper motor phase
2	PHASE 2A	Stepper motor phase
3	GND	Ground / Shield
4	PHASE 1B	Stepper motor phase
5	PHASE 1A	Stepper motor phase

CN12 – BRAKE

PIN	SIGNAL	DESCRIPTION
1	+24V	24V power supply
2	Brake	Open collector output with overvoltage clamp. 0.6A max.

J2 - STEP MODE JUMPERS

MODE3	MODE2	MODE1	Microsteping Mode	Step / Revolution (1.8 deg. Motor)
Installed	Installed	Installed	1/2	400
Installed	Installed	Open	1/8	1600
Installed	Open	Installed	1/16	3200
Installed	Open	Open	1/32	6400
Open	Installed	Installed	1/64	12800
Open	Installed	Open	1/128	25600
Open	Open	Installed	1/10	2000
Open	Open	Open	1/20	4000

J2- DECAY JUMPERS

FAST DECAY	SLOW DECAY	DECAY Method
Installed	X	Fast decay.
Open	Installed	Slow decay. Not recommended in micro stepping modes
Open	Open	Mixed mode.

J2 - MOTOR CURRENT JUMPERS

CRNT2	CRNT1	CRNT0	Motor current Peak [A]
Installed	Installed	Installed	0.5
Installed	Installed	Open	1
Installed	Open	Installed	1.5
Installed	Open	Open	2
Open	Installed	Installed	2.5
Open	Installed	Open	3
Open	Open	Installed	3.5
Open	Open	Open	4

LDCN Inputs

Input bit	Description
INbit0	**Diag / Limit1** (same as INbit4)
INbit1	**Diag / Limit2; Limit2=INbit11** if *OUTbit4=0* or **Limit2=1** if *OUTbit4=1*
INbit2	**Diag. Power_bit**
INbit3	**Limit1** (same as INbit4)
INbit4	**Limit1** (Input Limit1=CN8 pin3)
INbit5	**Limit2; Limit2=INbit11** if *OUTbit4=0* or **Limit2=1** If *OUTbit4=1*
INbit6	**BridgeSTA=0** if *OUTbit4=0 and OUTbit5=0* or **BridgeSTA=1** if *OUTbit5=1 or OUTbit4=1*
INbit7	**N.A.**
INbit8	**N.A.**
INbit9	**VelocityLIMIT** (mBUS Door Monitor) *see Note*
INbit10	**SysLATCH**
INbit11	**Limit2** (Limit2 input=CN8 pin6)
INbit12 to INbit15	**N.A.**

Note: *When the velocity limit is set in the EEPROM*

LDCN Outputs

<table>
<tr><th>Bit</th><th>Description</th></tr>
<tr><td>OUTbit0
OUTbit1</td><td>Brake Control
<table>
<tr><th>OUTbit0</th><th>OUTbit1</th><th>Servo</th><th>Brake</th></tr>
<tr><td>0</td><td>x</td><td>OFF</td><td>OFF</td></tr>
<tr><td>0</td><td>x</td><td>ON</td><td>ON</td></tr>
<tr><td>1</td><td>0</td><td>x</td><td>OFF</td></tr>
<tr><td>1</td><td>1</td><td>x</td><td>ON</td></tr>
</table></td></tr>
<tr><td>OUTbit2</td><td>N.A.</td></tr>
<tr><td>OUTbit3</td><td>N.A.</td></tr>
<tr><td>OUTbit4</td><td>LatchSEL
<table>
<tr><th>LatchSEL (OUTbit4)</th><th>Limit2</th><th>Latch source</th><th>BridgeSTA (INbit6)</th></tr>
<tr><td>0</td><td>Limit2 input</td><td>Input10 (change)</td><td>0</td></tr>
<tr><td>1</td><td>1</td><td>Limit2 input (change)</td><td>1</td></tr>
</table></td></tr>
<tr><td>OUTbit5
OUTbit6</td><td>Limit relay contact
<table>
<tr><th>UserREL (OUTbit6)</th><th>Bridge (OUTbit5)</th><th>Limit Relay</th></tr>
<tr><td>0</td><td>0</td><td>
<table>
<tr><th>Limit2 (CN8 pin6)</th><th>Limit1 (CN8 pin3)</th><th>LatchSEL (OUTbit4)</th><th>Limit Relay</th></tr>
<tr><td>closed</td><td>closed/open</td><td>0 or 1</td><td>Closed</td></tr>
<tr><td>open</td><td>closed/open</td><td>0</td><td>Open</td></tr>
<tr><td>open</td><td>closed</td><td>1</td><td>Closed</td></tr>
<tr><td>open</td><td>open</td><td>0 or 1</td><td>Open</td></tr>
</table></td></tr>
<tr><td>0</td><td>1</td><td>BridgeSTA=1; Limit Relay is Closed</td></tr>
<tr><td>1</td><td>0</td><td>General purpose user relay - Open</td></tr>
<tr><td>1</td><td>1</td><td>General purpose user relay - Closed</td></tr>
</table></td></tr>
<tr><td>OUTbit7 to OOUTbit19</td><td>N.A.</td></tr>
</table>

LED

ORANGE	GREEN	STATE
ON	ON	I/O and Logic power supply present. LDCN network not initialized.
Alternate		Drive is disabled. CN2pin4 / CN3pin4 are LOW (open).
OFF	BLINK	Drive is ready. Motor driver is OFF.
OFF	ON	Motor driver is ON. Brake is released.

Application note –Safety Bus

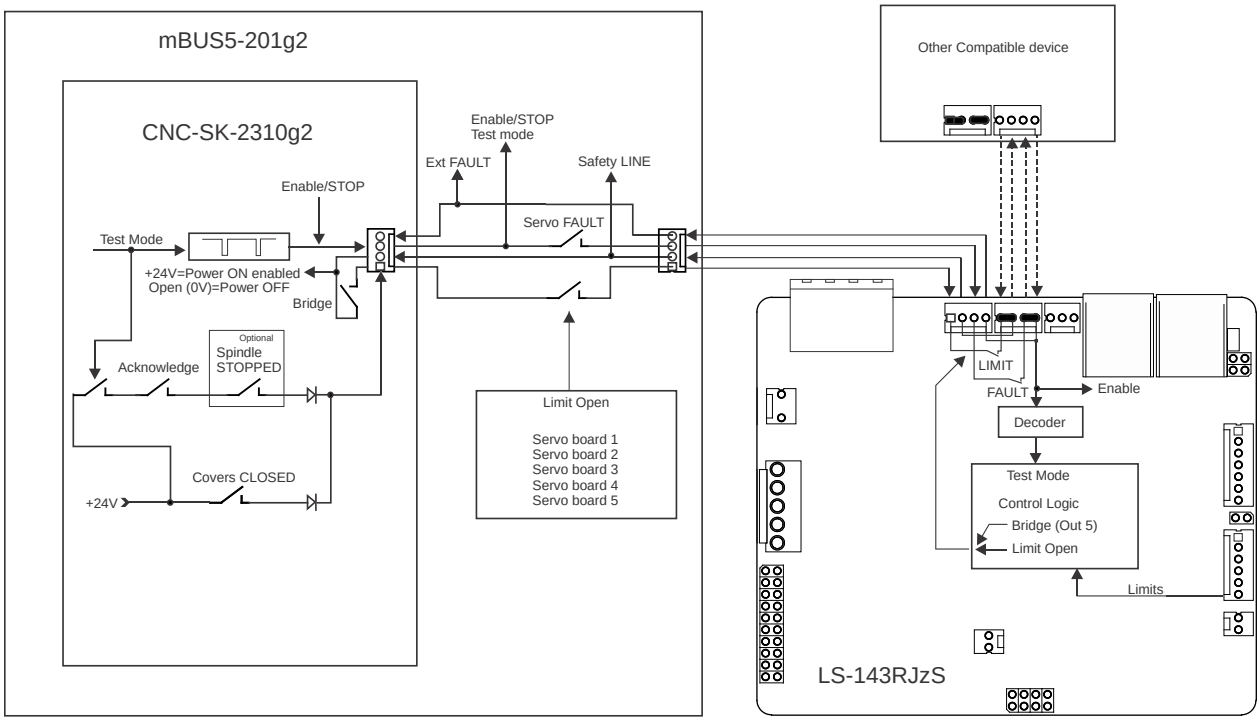

Application note – Zero SPEED Automation garde

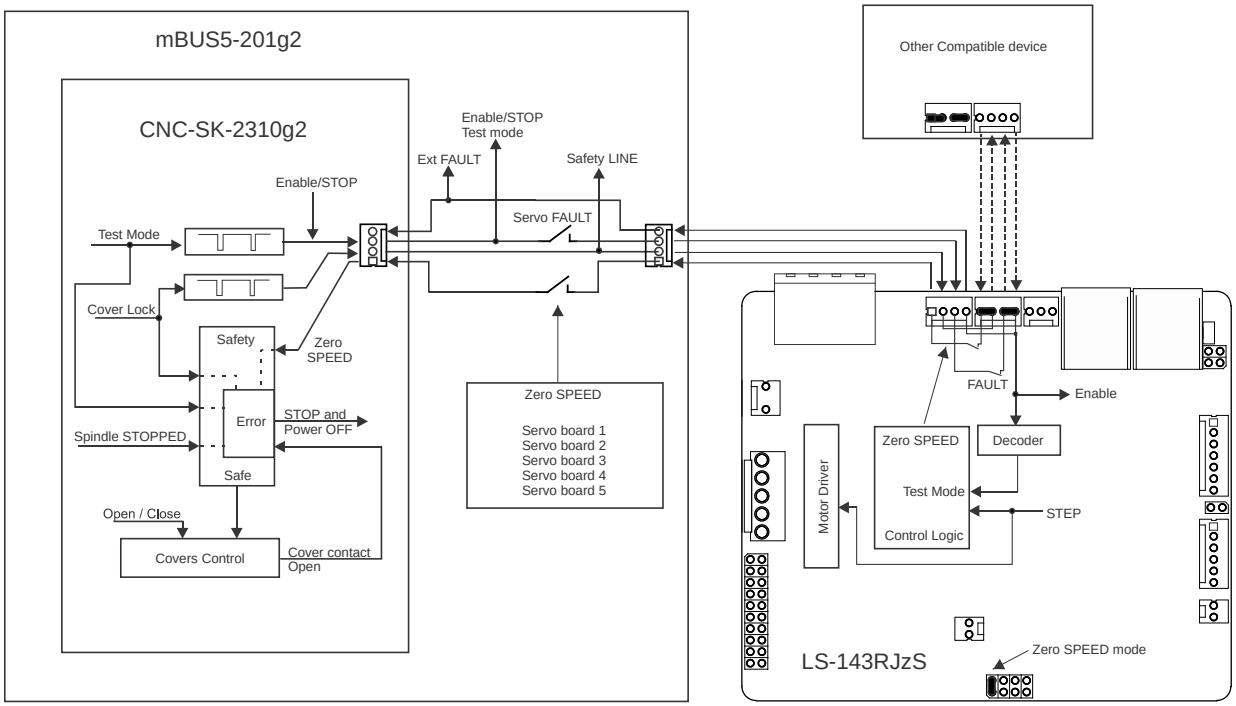

Note: *For more information refer to CNC-SK-2310g2 manual (http://www.logosolinc.com/files/downloads/CNC/ls-2310g2.pdf).*