Multi Axis Robot Controller LRC-331g3 / LRC-431g3 / LRC-531g3

Doc # 710000006 / Rev. A, 31-Aug-2017

Features

- **All-in-One Servo Solution for robotic applications**
- **PVAT, PVT and Path-point (PT) velocity profiles with multi-axis coordinated motion control**
- **Sinusoidal motor phases commutation**
- **Digitally controlled Torque loop**
- **Motors supported**
  - **Brushless 60/120° commutated**
  - **Linear**
  - **Voice coil**
  - **Brush**
- **Encoders supported**
  - **Quadrature Incremental**
  - **Panasonic S quadrature incremental**
  - **Panasonic 17bit and 23bit serial absolute**
  - **Tamagawa 17bit and 23bit serial absolute**
- **Incremental encoder transition rate up to 10.0 MHz**
- **Output current :**
  - **9A peak / 6A continuous – Motor T**
  - **5.5A peak / 4A continuous – Motor R**
  - **10A peak / 8A continuous – Motor Z**
  - **5.5A peak / 4A continuous – Motor R2**
  - **5.5A peak / 4A continuous – Motor R3**
- **Motor DC bus 200V Abs. max.**
- **Servo loop rate 51.2µS**
- **PWM frequency 19.5 kHz**
- **32-bit position, velocity, acceleration, 16-bit PID/PIV filter gain values**
- **23 Digital Outputs and 27 Digital Inputs**
- **Encoder feedback loss protection**
- **Comprehensive motor output short-circuit protection**
  - **Output to output**
  - **Output to ground**
- **Adjustable motor current and overload time limits**
- **Under voltage shutdown**
- **Overheating protection**
- **Opto-isolated RS-232 Host interface, two generic purpose serial interfaces, 10/100BaseT Ethernet interface**
- **Up to 5 Axis simultaneous multiple positions, multiple inputs hardware-assisted latching**
- **Enhanced position latching for on-the-fly wafer alignment**

Description

LRC-331g3 / LRC-431g3 / LRC-531g3 are three, four and five axis servo controllers with integrated PC-104 x86 CPU and power amplifiers designed for applications requiring sinusoidal control of Rotary or Linear brushless motors, DC (brush), or Voice coil motors. They can be used as build-in or external controllers.

LRC-331g3 / LRC-431g3 / LRC-531g3 can be controlled via host RS-232 or 10/100baseT Ethernet interface. Additional LDCN devices can be connected using LDCN extension interface. Up to two additional RS232 devices can be connected directly to the CPU module.

LRC-331g3 / LRC-431g3 / LRC-531g3 are equipped with various safety features such as output and motor short protection, under voltage shutdown and encoder presence control, SmartSTOP functionality to avoid arm dropout when the machine is externally stopped or the power is disconnected. The maximum motor output current and overload time can be set.

Advanced motion control technology (including a variety of motion profiles allowing the use of very high resolution encoders) enables superior multi-axis trajectory control capabilities. Hardware-assisted position latching enhances noise immunity when used for on-the-fly wafer aligning.

TECHNICAL SPECIFICATIONS (3-axis) rated at 25°C ambient, POWER (+)=80VDC, Load=250μH motors

+ MOTOR POWER	60 to 180Vdc, 200V Absolute Maximum
+24V	18VDC to 36VDC Logic and I/O power supply
+24V Current	0.5A Maximum. LRC-331g3 with PC-104 CPU board installed
MAX MOTOR OUTPUT CURRENT Peak Motor T / Motor R / Motor Z Continuous Motor T / Motor R / Motor Z	 9A / 5.5A / 10A 6 A / 4A / 8A
MIN LOAD INDUCTANCE	200μH
PWM SWITCHING FREQUENCY	19.5KHz
SERVO RATE	51.2 μS
HOST RS-232 BAUD RATE	9.6Kb/Sec to 115.2 Kb/Sec
DIGITAL OUTPUTS Source driver OutputC, OutputD, OutputP OutputE, OutputF, OutputG, OutputH, OutputJ, OutputK, OutputL, OutputM, OutputN, BackupENABLE Open collector OutputA, OutputB, BRAKE, PowerENABLE, FAN	 24V (18Vdc to 36Vdc Maximum). Output Short protection. Output clamp diode. 0.2A max per output. 0.1A max per output. Output Short protection. Output clamp diode to +24V / 0.4A max per output.
+24V / 0.25A	Protected 24V / 0.25A power output.
ENCODER INPUTS Encoder T, Encoder R, Encoder Z Enc +A, Enc -A, Enc +B, Enc -B, Enc +Z, Enc –Z/H3, +Rx/H1, -Rx/H2	 Differential RS-422 compatible inputs with 220Ohm terminators HI=3.5V, LO=1.5V, 2K2 pull-up resistors
DIGITAL INPUTS Home T, Home Z SensorA, SensorB, SensorC, SensorD Home R, InputE, InputF, InputG, InputH, InputJ, InputK, InputL, InputM, InputN, InputR, AcDOWN	 HI=3.5V, LO=1.5V, 2K2 pull-up resistors LOmin=-0.5V<LO< 5V; 15V<HI<HImax=36V; Imax=8mA *Refer to - 'Connectors and Jumpers' - J7and J10 descriptions for terminators details* LOmin=-1V<LO< 17V; 20V<HI<HImax=36V; Imax=1mA
ENCODER	Quadrature with index. Encoder transition rate up to 10MHz. Absolute 17bit and 23bit serial encoders Panasonic or Tamagawa.
HALL SENSORS	5V TTL or Open-Collector 60/120° hall sensors. Panasonic A and S series motors with serially transmitted hall data.
LEDs LD1, LD2, LD3 LD4, LD5, LD6	 LD2 -> MOTOR POWER is ON, LD3 -> LDCN initialized, LD4 -> SystemFault, When Externally disabled LD2 and LD4 will alternate LD1 -> +5V, LD5 Host RS-232, LD6 -> Firmware Status
PROTECTION Short circuit	 Motor output to Motor output, Motor output to GND
POWER DISSIPATION (max)	90W
THERMAL REQUIREMENTS Storage temperature range Operating temperature range	 –30 to +85 °C 0 to 45 °C
MECHANICAL Dimensions Weight	 13.75" x 5.00" x 1.33" 1.875 lb. (0.85 kg)
+5V SOURCE Max output current	 600mA for all output pins combined
MATING CONNECTORS Motor T, Motor R, Motor Z OutputA, OutputB Home T, Home Z, Aux POWER, FAN COM1, COM2, Host RS-232 EncoderR Output I/O interface, POWER Control Encoder T, Encoder R, Encoder Z AUX LDCN, Host LDCN I/O Interface Extension Absolute encoder external backup Absolute encoder backup output	RECOMMENDED CONNECTOR TYPE Molex 09-50-8043 housing (3 pcs.) with 08-52-0125 pins (12 pcs.) Molex 22-01-3027 housing (2 pcs.) with 08-50-0114 pins (4 pcs.) Molex 22-01-3037 housing (4 pcs.) with 08-50-0114 pins (12 pcs.) Molex 22-01-3047 housing (3 pcs.) with 08-50-0114 pins (12 pcs.) Molex 22-01-3067 housing (1 pcs.) with 08-50-0114 pins (6 pcs.) Molex 22-01-3107 housing (2 pcs.) with 08-50-0114 pins (20 pcs.) Molex 22-01-3127 housing (3 pcs.) with 08-50-0114 pins (36 pcs.) 8 pin RJ-45 IDS-26 Flat cable connector Hirose DF3-2S-2C with DF3-2428SC pins (2 pcs.) Hirose DF3-4S-2C with DF3-2428SC pins (4 pcs.)

TECHNICAL SPECIFICATIONS for 4 and 5 axis rated at 25ºC ambient, POWER (+)=80VDC, Load=250µH motors

+ MOTOR POWER	60 to 180Vdc, 200V Absolute Maximum
+24V	18VDC to 36VDC Logic and I/O power supply
+24V Current	0.7A Maximum. LRC-431g3 or LRC-531g3 with PC-104 CPU board installed
MAX MOTOR OUTPUT CURRENT for Motor R2 / R3 Peak Continuous	 5.5A 4A
MIN LOAD INDUCTANCE	200µH
PWM SWITCHING FREQUENCY	19.5KHz
SERVO RATE	51.2 µS
Extension board DIGITAL OUTPUTS Source driver OutputC2, OutputD2, OutputP2 OutputA2, OutputB2	 24V (18Vdc to 36Vdc Maximum). Output Short protection. Output clamp diode. 0.2A max per output. 0.1A max per output.
+24V / 0.25A	Protected 24V / 0.25A power output.
ENCODER R2 INPUTS Enc +A, Enc -A, Enc +B, Enc -B, Enc +Z, Enc –Z/H3, +Rx/H1, -Rx/H2	 Differential RS-422 compatible inputs with 220Ohm terminators HI=3.5V, LO=1.5V, 2K2 pull-up resistors
Extension board DIGITAL INPUTS $\overline{\text{SensorA2}}$, $\overline{\text{SensorB2}}$, $\overline{\text{SensorC2}}$, $\overline{\text{SensorD2}}$ $\overline{\text{Home R2}}$, $\overline{\text{InputV}}$, $\overline{\text{InputW}}$	 LOmin=-0.5V<LO< 5V; 15V<HI<HImax=36V; Imax=8mA *Refer to - 'Connectors and Jumpers' – J41 and J42 for terminators details*
ENCODER	Quadrature with index. Encoder transition rate 10MHz. Absolute 17bit and 23bit serial encoders Panasonic or Tamagawa.
HALL SENSORS	5V TTL or Open-Collector 60/120º hall sensors. Panasonic A and S series motors with serially transmitted hall data.
LEDs LD41	 Low intensity - +5V, Blink – Network is initialized, ON – Motor R2 servo is ON
PROTECTION Short circuit	 Motor output to motor output, Motor output to GND
POWER DISSIPATION (max)	110W (all axes combined)
THERMAL REQUIREMENTS Storage temperature range Operating temperature range	 –30 to +85 ºC 0 to 45 ºC
MECHANICAL – 4 or 5 axis controller Dimensions Weight	 17.32" x 5.00" x 1.33" 2.140 lb. (0.97 kg)
+5V SOURCE Max output current	 600mA for all output pins combined
MATING CONNECTORS Motor R2 / R3 OutputA2, OutputB2 InputV, InputW I/O Interface extension 2 I/O interface 2 Encoder R2 / R3	RECOMMENDED CONNECTOR TYPE Molex 09-50-8043 housing (2 pcs.) with 08-52-0125 pins (8 pcs.) Molex 22-01-3027 housing (2 pcs.) with 08-50-0114 pins (4 pcs.) Molex 22-01-3037 housing (2 pcs.) with 08-50-0114 pins (6 pcs.) Molex 22-01-3067 housing (1 pcs.) with 08-50-0114 pins (6 pcs.) Molex 22-01-3107 housing (1 pcs.) with 08-50-0114 pins (10 pcs.) Molex 22-01-3127 housing (2 pcs.) with 08-50-0114 pins (24 pcs.)

DIMENSIONAL DRAWING - LRC-331g3

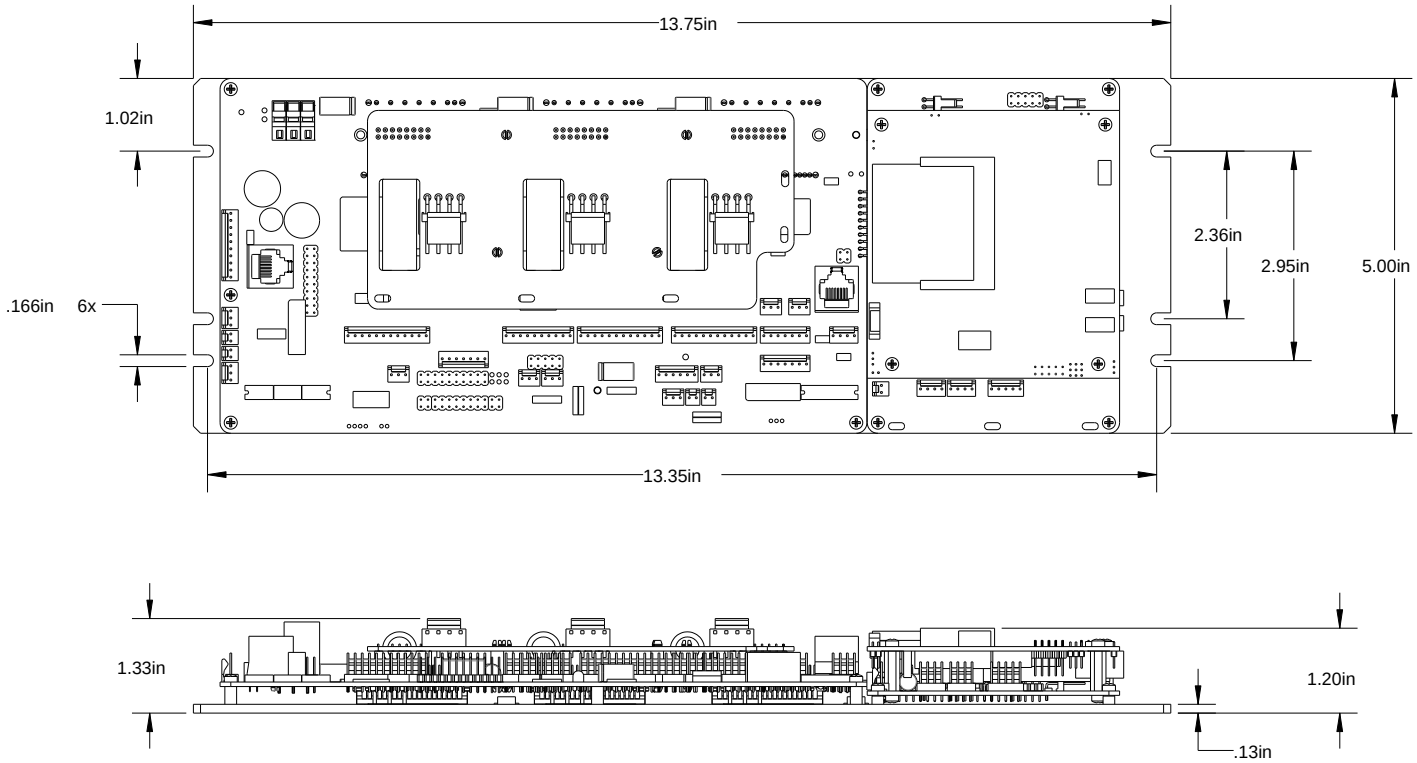

DIMENSIONAL DRWING- LRC-431g3 / LRC-531g3

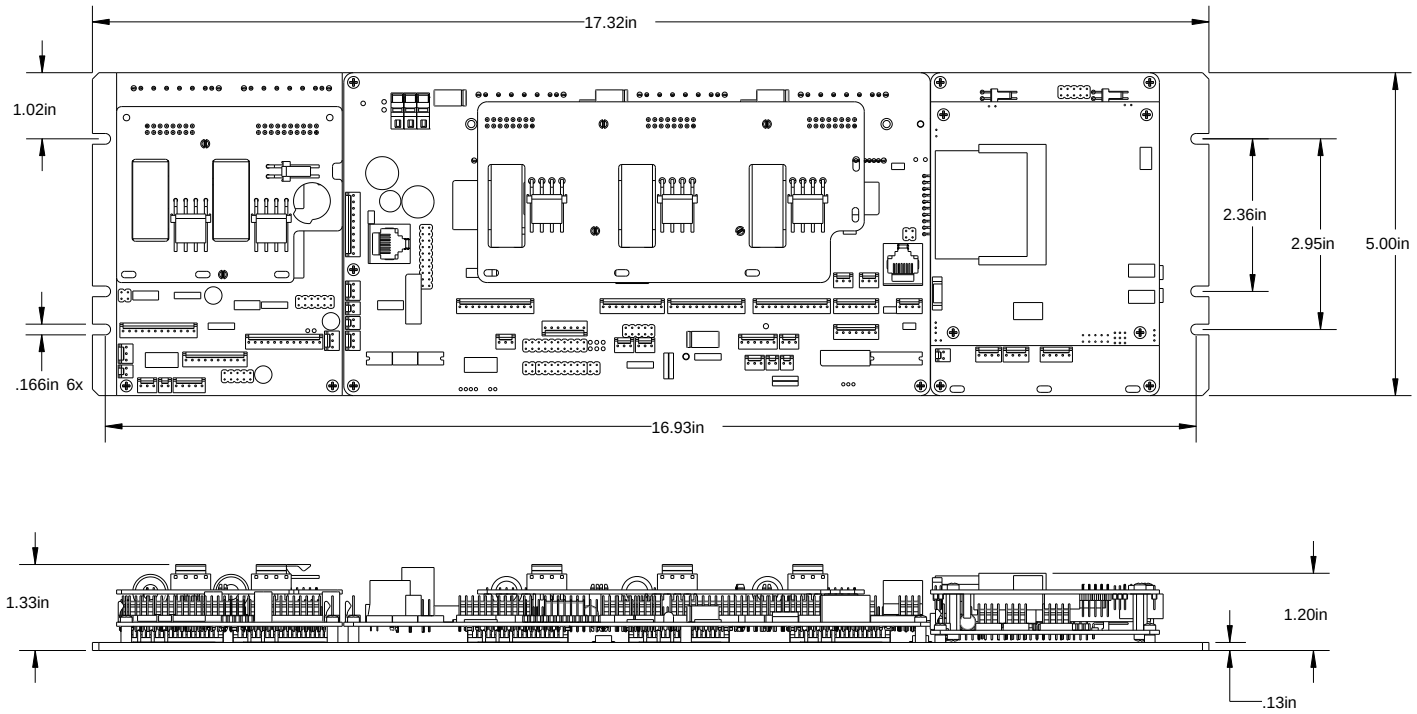

LRC-331g3 ROBOT CONTROLLER LAYOUT

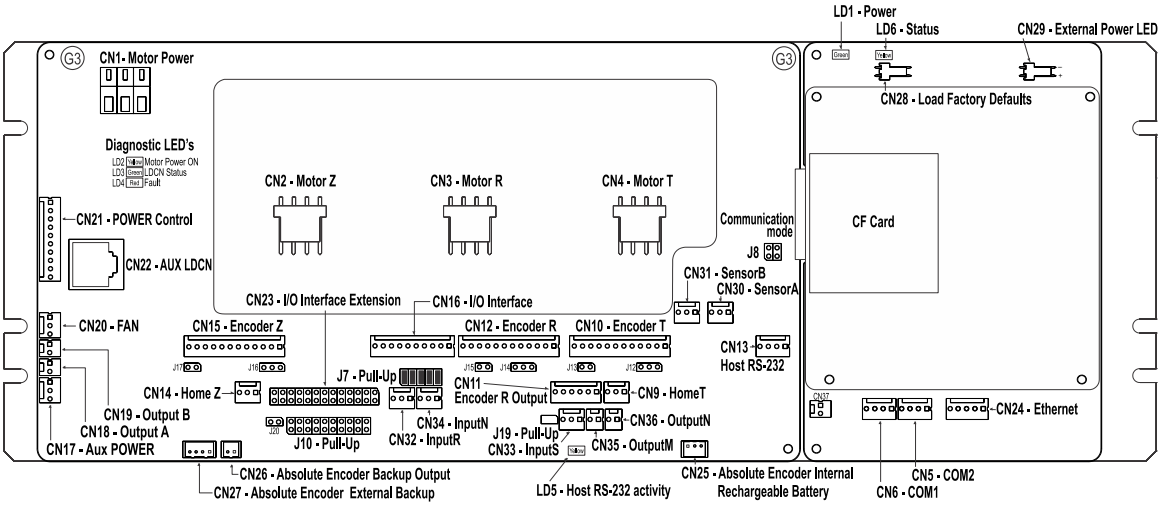

LRC-431g3 / LRC-531g3 ROBOT CONTROLLER LAYOUT

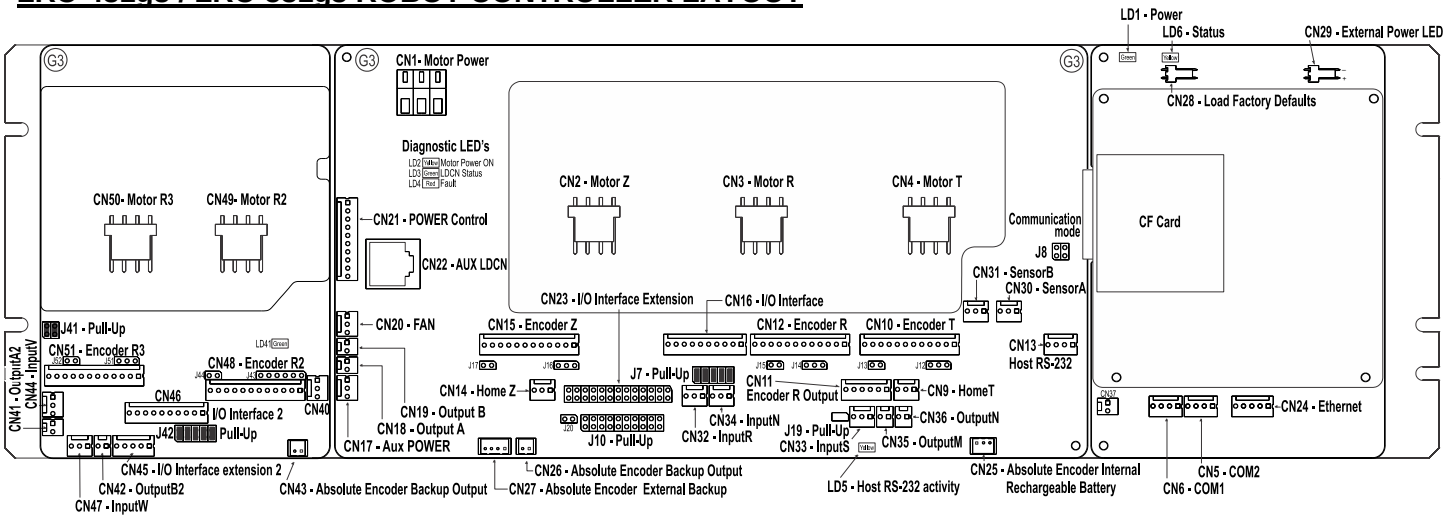

ORDERING GUIDE

PART NUMBER	MODEL	DESCRIPTION
9103310243	LRC-331g3U	Universal 3-Axis (Incremental/Absolute, ABZ, S, A4, A6, TBLi2, TBLi4, Filter)
9104310223	LRC-431g3U	Universal 4-Axis (Incremental/Absolute, ABZ, S, A4, A6, TBLi2, TBLi4, Filter)
9105310083	LRC-531g3U	Universal 5-Axis (Incremental/Absolute, ABZ, S, A4, A6, TBLi2, TBLi4, Filter)

LRC-331g3 QUADRATURE ENCODERS CONNECTORS AND PINOUT

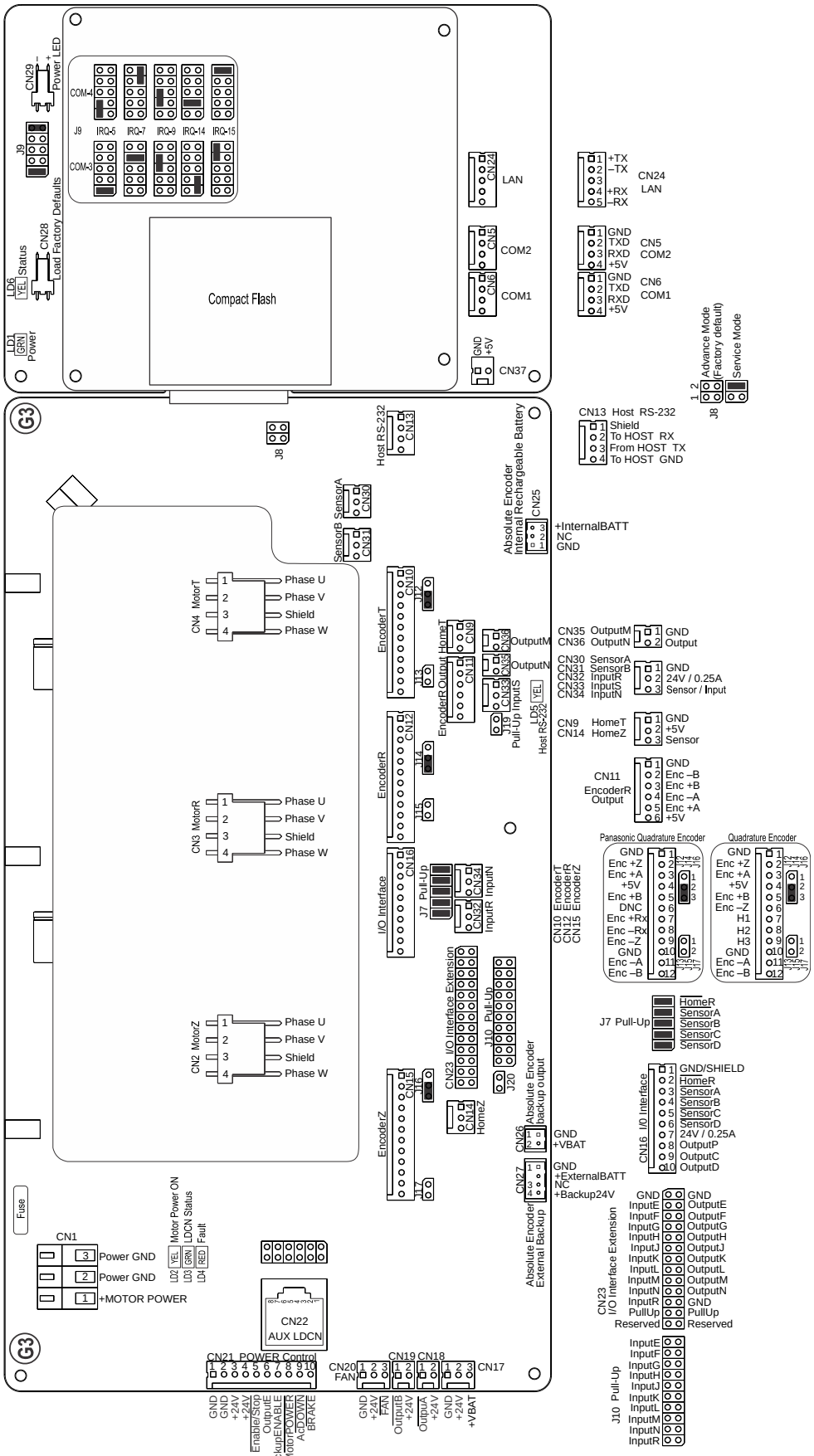

LRC-331g3 SERIAL ABSOLUTE ENCODERS CONNECTORS AND PINOUT

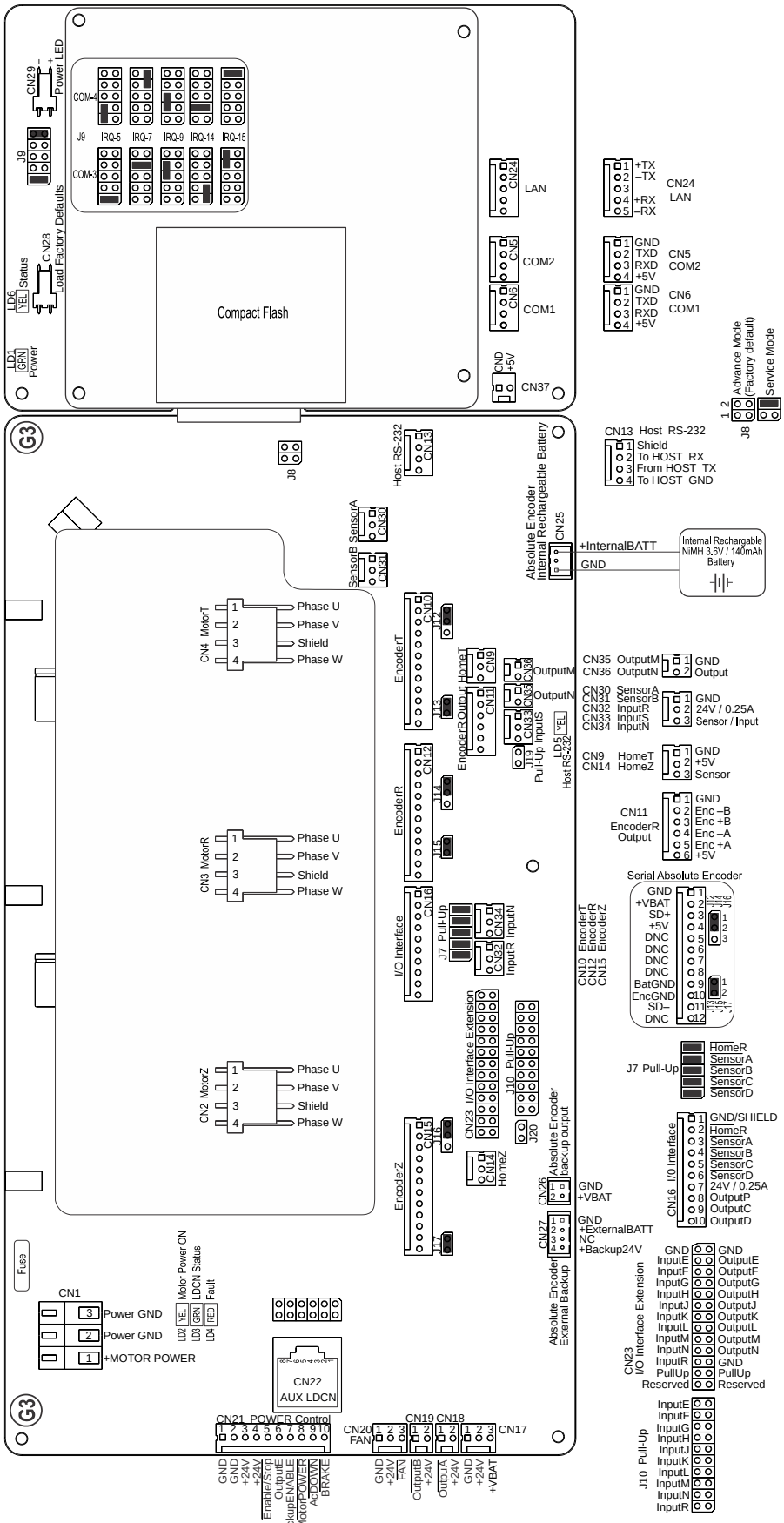

LRC-431g3 / LRC-531g3 QUADRATURE ENCODERS CONNECTORS AND PINOUT

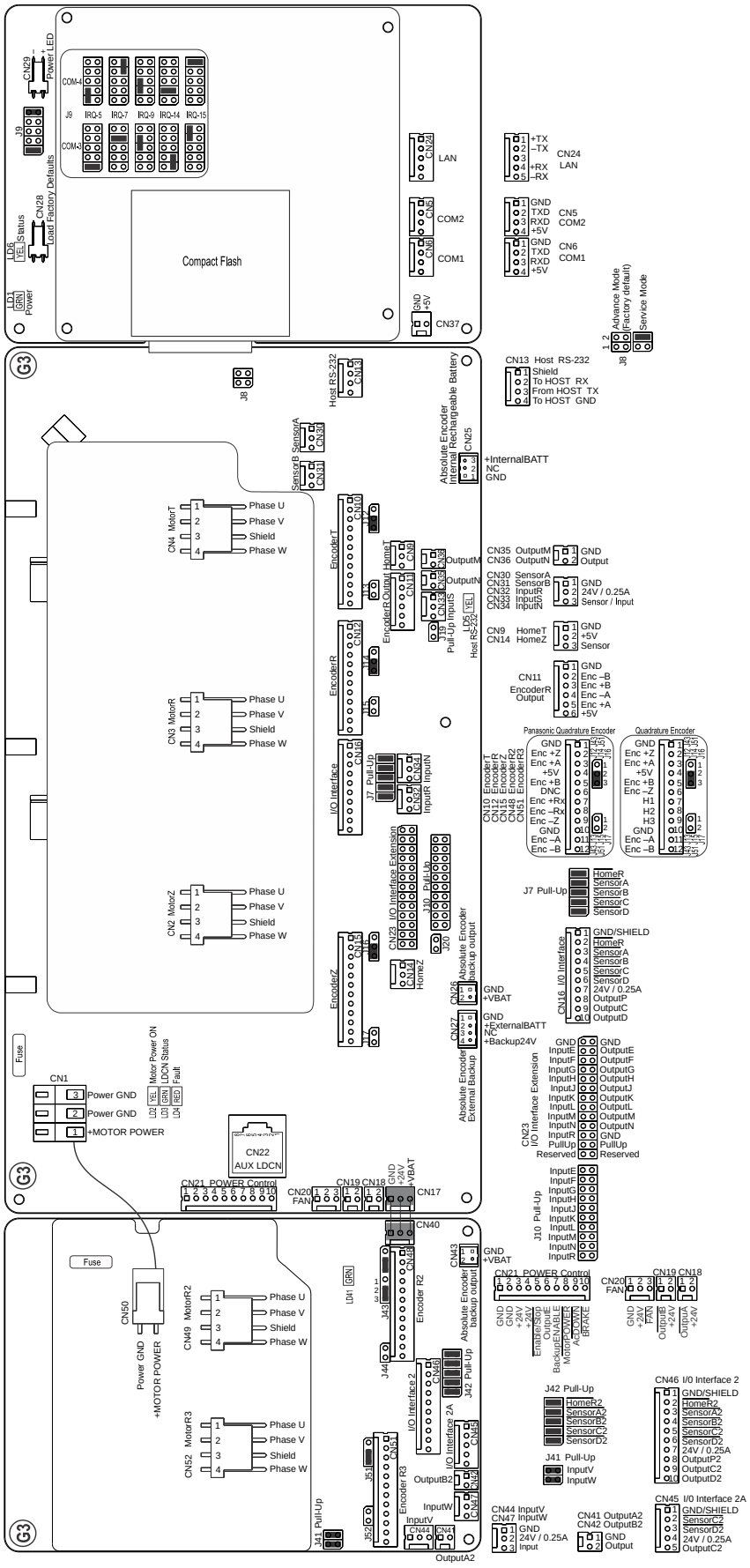

LRC-431g3 / LRC-531g3 SERIAL ABSOLUTE ENCODERS CONNECTORS AND PINOUT

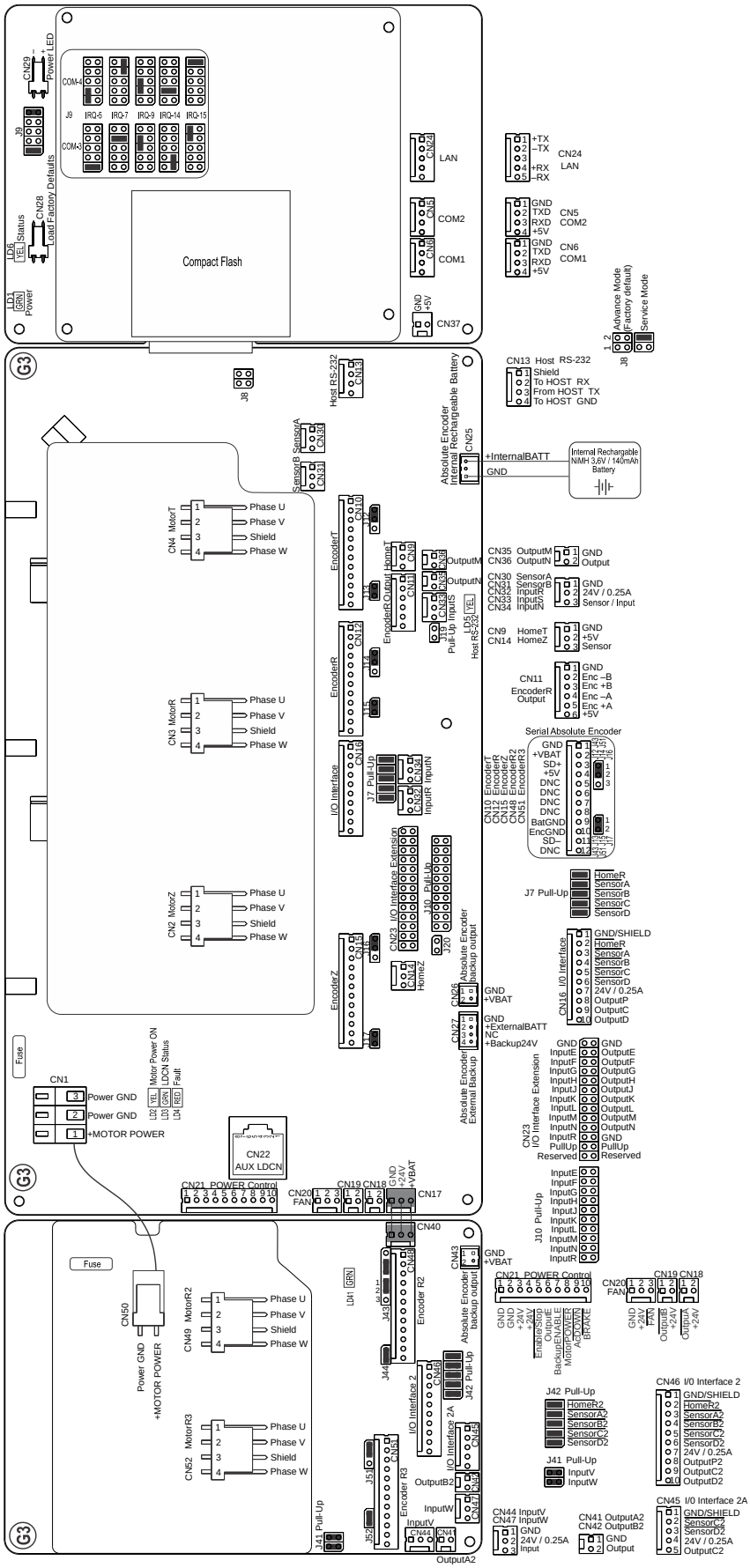

LRC-331g3 / LRC-431g3 / LRC-531g3 DB25 I/O INTERFACE EXTENSION

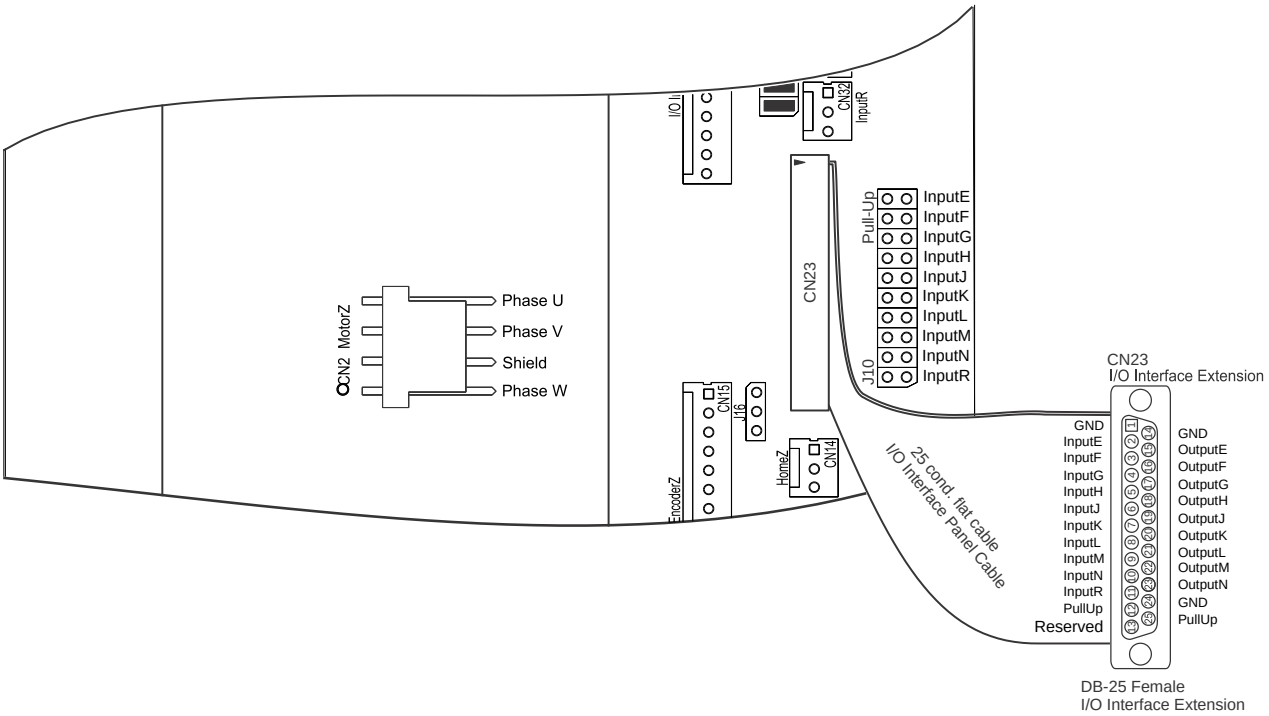

LRC-331g3 / LRC-431g3 / LRC-531g3 CONNECTORS

CN1 – Motor Power

PIN	SIGNAL	DESCRIPTION
1	+Motor POWER	Motor power supply +60 to +180Vdc, 200V Absolute Maximum
2	Power GND	Power supply ground
3	Power GND	Power supply ground

CN2 - Motor T, CN3 - Motor R, CN4 - Motor Z

PIN	SIGNAL	DESCRIPTION
1	Phase U	Motor phase for Panasonic and other Brushless motors N.C. for DC and Voice Coil motors
2	Phase V	Motor phase for Panasonic and other Brushless motors Positive terminal for DC and Voice Coil motors
3	Shield	Shield
4	Phase W	Motor phase for Panasonic and other Brushless motors Negative terminal for DC and Voice Coil motors

CN5 – COM2

PIN	SIGNAL	DESCRIPTION
1	GND	Ground
2	TxD	COM2 Transmit Data
3	RxD	COM2 Receive Data
4	+5VCOM	Power supply output[1]

CN6 – COM1

PIN	SIGNAL	DESCRIPTION
1	GND	Ground
2	TxD	COM1 Transmit Data
3	RxD	COM1 Receive Data
4	+5VCOM	Power Supply Output[1]

CN9 – Home T

PIN	SIGNAL	DESCRIPTION
1	GND	Ground
2	+5V	Power supply output[2]
3	HomeT	Home T sensor input, LDCN AxisT Status bit5, Input bit4

[1] ***Note:*** *0.25A Resetable fuse for both connector pins combined.*
[2] ***Note:*** *0.6A max for all +5V connector pins combined.*

CN10 – Encoder T, CN12 – Encoder R, CN15 – Encoder Z in Quadrature encoder mode (Jumper configurable)

PIN	SIGNAL	DESCRIPTION
1	GND	Ground
2	Enc +Z	Encoder phase +Z
3	Enc +A	Encoder phase +A
4	+5V	Encoder power supply[1]
5	Enc +B	Encoder phase +B
6	DNC / Enc –Z	Not connected for Panasonic A and S series motors with incremental encoder Encoder phase –Z for Hall mode
7	+RX / H1	Hall sensor input #1 for Hall mode Hall data +RX for Panasonic A and S series motors with incremental encoder Not connected for motors DC or Voice Coil motors
8	–RX / H2	Hall sensor input #2 for Hall mode Hall data –RX for Panasonic A and S series motors with incremental encoder Not connected for DC or Voice Coil motors
9	Enc –Z / H3	Hall sensor input #3 for Hall mode Encoder phase –Z for Panasonic A and S series motors with incremental encoder Connect to GND for DC or Voice Coil motors
10	GND	Ground
11	Enc –A	Encoder phase –A
12	Enc –B	Encoder phase –B

CN10 – Encoder T, CN12 – Encoder R, CN15 – Encoder Z in Serial Absolute encoder mode (Jumper configurable)

PIN	SIGNAL	DESCRIPTION
1	GND	Ground
2	+VBAT	+3.6V Absolute encoder backup battery power output. (1mA max for all connector pins combined.)
3	SD+	Serial data positive line for motors with serial absolute encoder
4	+5V	Encoder power supply[1]
5	Reserved	Not applicable, do not connect
6	Reserved	Not connected, do not connect
7	Reserved	Not applicable, do not connect
8	Reserved	Not applicable, do not connect
9	BatGND	Battery ground
10	EncGND	Encoder ground
11	SD-	Serial data negative line for motors with serial absolute encoder
12	Reserved	Not applicable, do not connect

CN11 – Encoder R Output (Quadrature encoder mode only)

PIN	SIGNAL	DESCRIPTION
1	GND	Ground
2	Enc –B	Encoder R phase –B RS-422 buffered output.
3	Enc +B	Encoder R phase +B RS-422 buffered output.
4	Enc –A	Encoder R phase –A RS-422 buffered output.
5	Enc +A	Encoder R phase +A RS-422 buffered output.
6	+5V	Power supply output

CN13 – Host RS-232

PIN	SIGNAL	DESCRIPTION
1	To Host GND	Isolated Host GND
2	To Host RxD	Optically isolated RS-232 data output
3	From Host TxD	Optically isolated RS-232 data input
4	To Host GND	Isolated Host GND

[1] ***Note**: 0.6A max. for all +5V connector pins combined.*

CN14 – Home Z

PIN	SIGNAL	DESCRIPTION
1	GND	Ground
2	+5V	Power supply output[1]
3	HomeZ	Home Z sensor input, LDCN AxisZ Status bit5, Input bit4

CN16 – I/O Interface

PIN	SIGNAL	DESCRIPTION
1	GND	Ground
2	$\overline{\text{HomeR}}$	Home R sensor input[2] LDCN AxisR Status bit5, Input bit4
3	$\overline{\text{SensorA}}$	Sensor A input[2] LDCN AxisT Status bit6, Input bit5. LDCN AxisR Input bit3 (wired to CN30 pin3)
4	$\overline{\text{SensorB}}$	Sensor B input[2] LDCN AxisR Status bit6, Input bit5 (wired to CN31 pin3)
5	$\overline{\text{SensorC}}$	Sensor C input[2] LDCN AxisR Input bit6 Can be selected as position Latching (Scanning) input
6	$\overline{\text{SensorD}}$	Sensor D input[2] LDCN AxisR Input bit7 Can be selected as position Latching (Scanning) input
7	+24V / 0.25A	+24V Power source protected with resettable fuse. 0.25A max. for all connector pins combined.
8	OutputP	LDCN AxisR Output bit9 Source output 0.2A. Short protected. With clamp diode
9	OutputC	LDCN AxisR Output bit6 Source output 0.2A. Short protected. With clamp diode
10	OutputD	LDCN AxisR Output bit7 Source output 0.2A. Short protected. With clamp diode

[1] ***Note**: 0.6A max. for all +5V connector pins combined.*
[2] ***Note:** Refer to - 'Jumper Settings' - J7 description for Pull-Up/Pull-Down terminator selection.*

CN17 – Aux POWER

PIN	SIGNAL	DESCRIPTION
1	GND	Ground
2	+24V	+24V (Connected to CN21 POWER Control pin3, pin4)
3	+VBAT	+3.6V Absolute encoder backup battery power output. (1mA max for all connector pins combined.)

CN18 – Output A

PIN	SIGNAL	DESCRIPTION
1	$\overline{\text{OutputA}}$	LDCN AxisR Output bit4 Open Collector output 0.4A. With clamp diode to +24V
2	+24V	+24V (Connected to CN21 POWER Control pin3, pin4)

CN19 – Output B

PIN	SIGNAL	DESCRIPTION
1	$\overline{\text{OutputB}}$	LDCN AxisR Output bit5 Open Collector output 0.4A. With clamp diode to +24V
2	+24V	+24V (Connected to CN21 POWER Control pin3, pin4)

CN20 – FAN

PIN	SIGNAL	DESCRIPTION
1	GND	Ground
2	+24V	+24V (Connected to CN21 POWER Control pin3, pin4)
3	$\overline{\text{FAN}}$	ON when: PowerENABLE is active or LDCN Outputs AxisZ FanON (Bit17) is set to 1 Open Collector output 0.4A. Short protected with clamp diode to +24V

CN21 – POWER Control

PIN	SIGNAL	DESCRIPTION
1	GND	Power supply Ground
2	GND	Power supply Ground
3	+24V	+24V power supply input
4	+24V	+24V power supply input
5	Enable/Stop	Enable input. Active when HIGH (24V) To enable Motor power supply and controller, it must be connected to > +15V Can be read from LDCN AxisZ Input Bit 12 (Latched) LDCN AxisZ Input Bit 8 (Transparent)
6	OutputE	LDCN AxisR Output bit8 (Connected to CN23 I/O Extension pin3) Source output 0.1A. Short protected. With clamp diode
7	BackupENABLE	ON when BackupEnable LDCN AxisZ Output bit16 = 1 and AcDOWN input < +17V. Source output 0.1A. Short protected. With clamp diode
8	$\overline{\text{PowerENABLE}}$	ON when PowerREQUEST = 1 and the controller is externally enabled. Open Collector output 0.4A. With clamp diode to +24V
9	$\overline{\text{AcDOWN}}$	Can be read from LDCN AxisZ Input Bit 14 (Latched) LDCN AxisZ Input Bit 10 (Transparent) Active when open or < +17V. Connect to +24V if not used
10	$\overline{\text{BRAKE}}$	Z axis brake output. Open Collector output 0.4A. Short protected with clamp diode to +24V Active when AxisZ motor is enabled and EngageBRAKE AxisZ Output bit0 = 0

CN22 – AUX LDCN Opto-isolated Auxiliary LDCN slave interface

PIN	SIGNAL	DESCRIPTION
1	OK/FAULT	Auxiliary LDCN device status input. OK = High (+5V), Fault = Open (0V)
2	AuxGND	Interface ground
5	+RX	+ Receive data input
3	–RX	– Receive data input
4	–TX	– Transmit data output
6	+TX	+ Transmit data output
7	–A_out/ FAULT	– Address select / Servo sync / Fault output
8	+A_out/FAULT	+ Address select / Servo sync / Fault output

CN23 – I/O Interface Extension (Flat cable connector)

PIN	SIGNAL	DESCRIPTION
1	GND	Ground
2	GND	Ground
3	InputE	Axis T – Input Bit 9.
4	OutputE	LDCN AxisR Output bit8 (Connected to CN21 POWER Control pin6) Source output 0.1A. Short protected. With clamp diode
5	InputF	Axis T – Input Bit 10 [1]
6	OutputF	Axis Z – Output Bit 4. Source output 0.1A. Short protected. With clamp diode
7	InputG	Axis T – Input Bit 11 [1]
8	OutputG	Axis Z – Output Bit 5. Source output 0.1A. Short protected. With clamp diode
9	InputH	Axis R – Input Bit 9 [1]
10	OutputH	Axis Z – Output Bit 6. Source output 0.1A. Short protected. With clamp diode
11	InputJ	Axis R – Input Bit 10 [1]
12	OutputJ	Axis Z – Output Bit 7. Source output 0.1A. Short protected. With clamp diode
13	InputK	Axis R – Input Bit 11 [1]
14	OutputK	Axis Z – Output Bit 8. Source output 0.1A. Short protected. With clamp diode
15	InputL	Axis R – Input Bit 12 [1]
16	OutputL	Axis Z – Output Bit 9. Source output 0.1A. Short protected. With clamp diode
17	InputM	Axis R – Input Bit 13 [1]
18	OutputM	Axis Z – Output Bit 10. Source output 0.1A. Short protected. With clamp diode (wired to CN36 pin2)
19	InputN	Axis R – Input Bit 14 [1]
20	OutputN	Axis Z – Output Bit 11. Source output 0.1A. Short protected. With clamp diode (wired to CN35 pin2)
21	InputR	Axis R – Input Bit 15 [1]
22	GND	Signal ground
23	Pull-Up	+24V Overload protected output with 0.25A resettable fuse for both outputs combined
24	Pull-Up	
25	Reserved	Reserved Do not connect
26	Reserved	Reserved Do not connect

CN23 – I/O Interface Extension (Robot panel DB-25 connector)

PIN	SIGNAL	DESCRIPTION
1	GND	Ground
2	InputE	Axis T – Input Bit 9. [1]
3	InputF	Axis T – Input Bit 10 [1]
4	InputG	Axis T – Input Bit 11 [1]
5	InputH	Axis R – Input Bit 9 [1]
6	InputJ	Axis R – Input Bit 10 [1]
7	InputK	Axis R – Input Bit 11 [1]
8	InputL	Axis R – Input Bit 12 [1]
9	InputM	Axis R – Input Bit 13 [1]
10	InputN	Axis R – Input Bit 14 [1]
11	InputR	Axis R – Input Bit 15 [1] (wired to CN32 pin3)
12	Pull-Up	+24V Overload protected output with 0.25A resettable fuse for both outputs combined
13	Reserved	Reserved Do not connect
14	GND	Signal ground
15	OutputE	AxisR Output bit8 (Connected to CN21 POWER Control pin6) Source output 0.1A. Short protected. With clamp diode
16	OutputF	Axis Z – Output Bit 4. Source output 0.1A. Short protected. With clamp diode
17	OutputG	Axis Z – Output Bit 5. Source output 0.1A. Short protected. With clamp diode
18	OutputH	Axis Z – Output Bit 6. Source output 0.1A. Short protected. With clamp diode
19	OutputJ	Axis Z – Output Bit 7. Source output 0.1A. Short protected. With clamp diode
20	OutputK	Axis Z – Output Bit 8. Source output 0.1A. Short protected. With clamp diode
21	OutputL	Axis Z – Output Bit 9. Source output 0.1A. Short protected. With clamp diode
22	OutputM	Axis Z – Output Bit 10. Source output 0.1A. Short protected. With clamp diode
23	OutputN	Axis Z – Output Bit 11. Source output 0.1A. Short protected. With clamp diode
24	GND	Ground
25	Pull-Up	+24V Overload protected output with 0.25A resettable fuse for both outputs combined

[1] ***Note:*** *Refer to - 'Jumper Settings' – J10 description for Pull-Up/Pull-Down terminator selection.*

CN24- LAN

PIN	SIGNAL	DESCRIPTION
1	+TX	Ethernet over twisted pair Local Area Network 10BASE-T and 100BASE-T
2	-TX	
3	NC	
4	+RX	
5	-RX	

CN25- Absolute Encoder Internal Rechargeable Battery

PIN	SIGNAL	DESCRIPTION
1	GND	Ground
2	NC	Not conncted
3	+InternalBATT	NiMH 3.6V / 140mAh internal rechargeable battery positive terminal

CN26 – Absolute Encoder Backup Output

PIN	SIGNAL	DESCRIPTION
1	BattGND	Battery ground
2	+VBAT	+3.6V Backup battery power output

CN27- Absolute Encoder External Backup

PIN	SIGNAL	DESCRIPTION
1	GND	Ground
2	+ExternalBATT	External battery 3.5V to 4.7V positive terminal. (**Optional**)
3	NC	Not connected
4	+Backup24V	+24V External backup power positive terminal. (**Optional**)

CN28 – Load Factory Defaults

PIN	SIGNAL	DESCRIPTION
1	GND	Ground
2	CTS3	Wired to COM3 - CTS. Terminated to +5V with 4.7KOhm

CN29 – Power LED

PIN	SIGNAL	DESCRIPTION
1	-LED	External power LED cathode. Wired to Ground
2	+LED	External power LED anode. 470 Ohm to +5V

CN30- Sensor A

PIN	SIGNAL	DESCRIPTION
1	GND	Ground
2	+24V / 0.25A	+24V Power source protected with resettable fuse. 0.25A max. for all connector pins combined.
3	$\overline{\text{SensorA}}$	Sensor A input [1] LDCN AxisT Status bit6, Input bit5. LDCN AxisR Input bit3 (wired to CN16 pin3)

CN31- Sensor B

PIN	SIGNAL	DESCRIPTION
1	GND	Ground
2	+24V / 0.25A	+24V Power source protected with resettable fuse. 0.25A max. for all connector pins combined.
3	$\overline{\text{SensorB}}$	Sensor B input [1] LDCN AxisR Status bit6, Input bit5 (wired to CN31 pin3)

CN32- Input R

PIN	SIGNAL	DESCRIPTION
1	GND	Ground
2	+24V / 0.25A	+24V Power source protected with resettable fuse. 0.25A max. for all connector pins combined.
3	InputR [1]	LDCN Axis R – Input Bit 15 (wired to CN23 pin21)

CN33- Input S

PIN	SIGNAL	DESCRIPTION
1	GND	Ground
2	+24V / 0.25A	+24V Power source protected with resettable fuse. 0.25A max. for all connector pins combined.
3	InputS [1]	LDCN AxisT Input bit12

CN34- Input N

PIN	SIGNAL	DESCRIPTION
1	GND	Ground
2	+24V / 0.25A	+24V Power source protected with resettable fuse. 0.25A max. for all connector pins combined.
3	InputN [1]	LDCN AxisR Input bit14 (wired to CN23 pin19)

[1] ***Note:*** *Refer to - 'Jumper Settings' - J7, J10 and J19 description for Pull-Up/Pull-Down terminator selection.*

CN35 – Output N

PIN	SIGNAL	DESCRIPTION
1	GND	Ground
2	OutputN	Axis Z – Output Bit 11. Source output 0.1A. Short protected. With clamp diode (wired to CN23 pin20)

CN36 – Output M

PIN	SIGNAL	DESCRIPTION
1	GND	Ground
2	OutputM	Axis Z – Output Bit 10. Source output 0.1A. Short protected. With clamp diode (wired to CN23 pin18)

CN37 – Power supply +5VDC

PIN	SIGNAL	DESCRIPTION
1	GND	Ground
2	+5V	Power supply output. 0.6A max for all +5V outputs combined.

LRC-431g3 / LRC-531g3 CONNECTORS

CN40 – Aux Power Input

PIN	SIGNAL	DESCRIPTION
1	GND	Ground
2	+24V	+24V Power supply input
3	+VBAT	+3.6V Absolute encoders battery backup power input. Wired to CN42 pin2, CN48 pin2 and CN51 pin2

CN41 – Output A2

PIN	SIGNAL	DESCRIPTION
1	GND	Ground
2	OutputA2	LDCN Axis4 Output bit4 Source output 0.1A. Short protected. With clamp diode.

CN42 – Output B2

PIN	SIGNAL	DESCRIPTION
1	GND	Ground
2	OutputB2	LDCN Axis4 Output bit5 Source output 0.1A. Short protected. With clamp diode.

CN43 – Absolute Encoder Backup Output

PIN	SIGNAL	DESCRIPTION
1	BattGND	Battery ground
2	+VBAT	+3.6V Absolute encoder backup battery power output. (1mA max for all connector pins combined.) Wired to CN40 pin3, CN48 pin2 and CN51 pin2

CN44 – Input V

PIN	SIGNAL	DESCRIPTION
1	GND	Ground
2	+24V / 0.25A	Routed to CN46 pin7
3	InputV	LDCN Axis4 Input Bit12 [1]

[1] ***Note:*** *Refer to - 'Jumper Settings' – J41 description for Pull-Up/Pull-Down terminator selection.*

CN45 – I/O Interface 2A

PIN	SIGNAL	DESCRIPTION
1	GND	Ground
2	$\overline{\text{SensorC2}}$	Sensor C2 input [1] LDCN Axis R2 Input bit6.Can be selected as position Latching (Scanning) input LDCN Axis R3 Status bit5, Input bit4
3	$\overline{\text{SensorD2}}$	Sensor D2 input [1] LDCN AxisR Input bit7. Can be selected as position Latching (Scanning) input
4	+24V / 0.25A	+24V Power source protected with resettable fuse. 0.25A max. for all connector pins combined.
5	OutputC2	LDCN Axis R2 Output bit6 Source output 0.2A. Short protected. With clamp diode

[1] ***Note:*** *Refer to - 'Jumper Settings' – J42 description for Pull-Up/Pull-Down terminator selection.*

CN46 – I/O Interface 2

PIN	SIGNAL	DESCRIPTION
1	GND	Ground
2	$\overline{\text{HomeR2}}$	Home R2 sensor input [1] Axis R2 LDCN Status bit5, Input bit0, Input bit4
3	$\overline{\text{SensorA2}}$	Sensor A2 input [1] LDCN Axis R2 Input bit3
4	$\overline{\text{SensorB2}}$	Sensor B2 input [1] LDCN Status bit6, Input bit1. LDCN Axis R2 Input bit5
5	$\overline{\text{SensorC2}}$	Sensor C2 input [1] LDCN Axis R2 Input bit6.Can be selected as position Latching (Scanning) input LDCN Axis R3 Status bit5, Input bit4
6	$\overline{\text{SensorD2}}$	Sensor D2 input [1] LDCN AxisR Input bit7. Can be selected as position Latching (Scanning) input
7	+24V / 0.25A	+24V Power source protected with resettable fuse. 0.25A max. for all connector pins combined.
8	OutputP2	LDCN Axis R2 Output bit9. Source output 0.2A. Short protected. With clamp diode
9	OutputC2	LDCN Axis R2 Output bit6. Shorted to CN34 – pin2 Source output 0.2A. Short protected. With clamp diode
10	OutputD2	LDCN Axis R2 Output bit7. Shorted to CN33 – pin2 Source output 0.2A. Short protected. With clamp diode

[1] ***Note:*** *Refer to - 'Jumper Settings' – J42 description for Pull-Up/Pull-Down terminator selection.*

CN47- Input W

PIN	SIGNAL	DESCRIPTION
1	GND	Ground
2	+24V / 0.25A	+24V Power source protected with resettable fuse. 0.25A max. for all connector pins combined.
3	InputW	LDCN Axis4 Input Bit13 [1]

[1] ***Note:*** *Refer to - 'Jumper Settings' – J41 description for Pull-Up/Pull-Down terminator selection.*

CN49- Motor R2, CN52 Motor R3

PIN	SIGNAL	DESCRIPTION
1	Phase U	Motor phase for Panasonic and other Brushless motors N.C. for DC and Voice Coil motors
2	Phase V	Motor phase for Panasonic and other Brushless motors Positive terminal for DC and Voice Coil motors
3	Shield	Shield
4	Phase W	Motor phase for Panasonic and other Brushless motors Negative terminal for DC and Voice Coil motors

CN48 – Encoder R2, CN51 – Encoder R3 in Quadrature encoder mode (Jumper configurable)

PIN	SIGNAL	DESCRIPTION
1	GND	Ground
2	Enc +Z	Encoder phase +Z
3	Enc +A	Encoder phase +A
4	+5V	Encoder power supply[1]
5	Enc +B	Encoder phase +B
6	DNC / Enc –Z	Not connected for Panasonic A and S series motors with incremental encoder Encoder phase –Z for Hall mode
7	+RX / H1	Hall sensor input #1 for Hall mode Hall data +RX for Panasonic A and S series motors with incremental encoder Not connected for motors DC or Voice Coil motors
8	–RX / H2	Hall sensor input #2 for Hall mode Hall data –RX for Panasonic A and S series motors with incremental encoder Not connected for DC or Voice Coil motors
9	Enc –Z / H3	Hall sensor input #3 for Hall mode Encoder phase –Z for Panasonic A and S series motors with incremental encoder Connect to GND for DC or Voice Coil motors
10	GND	Ground
11	Enc –A	Encoder phase –A
12	Enc –B	Encoder phase –B

[1] ***Note:*** *0.6A max. for all +5V connector pins combined.*

CN48 – Encoder R2, CN51 – Encoder R3 in Absolute encoder mode (Jumper configurable)

PIN	SIGNAL	DESCRIPTION
1	GND	Ground
2	+VBAT	+3.6V Absolute encoder backup battery power output. (1mA max for all connector pins combined.) Wired to CN42 pin2, CN48 pin2 and CN51 pin2
3	SD+	Serial data positive line for motors with serial absolute encoder
4	+5V	Encoder power supply[1]
5	Reserved	Not applicable, do not connect
6	Reserved	Not connected, do not connect
7	Reserved	Not applicable, do not connect
8	Reserved	Not applicable, do not connect
9	BatGND	Battery ground
10	EncGND	Encoder ground
11	SD-	Serial data negative line for motors with serial absolute encoder
12	Reserved	Not applicable, do not connect

[1] ***Note:*** *0.6A max. for all +5V connector pins combined.*

LRC-331g3 JUMPERS

J7 – Pull-UP

J7	DESCRIPTION
Installed [1]	Pull-Up 10K resistors to +24V are connected to the corresponding input on **CN16 – I/O Interface**. $\overline{\text{Home R}}$ $\overline{\text{SensorA}}$ $\overline{\text{SensorB}}$ (HI >15V or Open, LO< 5V or GND) $\overline{\text{SensorC}}$ $\overline{\text{SensorD}}$
Open	Pull-Up's are disabled. (HI >15V, LO< 5V or Open)

[1] ***Note:*** *Factory default settings*

J8 – Communication mode

J8-1	J8-2	DESCRIPTION
Open[1]	Open[1]	PC-104 mode CN13 – Host RS-232 is routed to PC-104 COM3 LDCN network is routed to PC-104 COM4
Installed	Open	Reserved
Open	Installed	LDCN network is routed to CN13 - Host LDCN
Installed	Installed	Reserved

[1] ***Note:*** *Factory default settings*

J10 – Pull-UP

J10	DESCRIPTION
Installed	Pull-Up 10K resistors to +24V are connected to the corresponding input on **CN23 – I/O Interface Extension**. InputE InputF InputG InputH (HI >15V or Open, LO< 5V or GND) InputJ InputK InputL InputM InputN InputR
Open [1]	Pull-Up's are disabled. (HI >15V, LO< 5V or Open)

[1] ***Note:*** *Factory default settings*

J19 – Input S Pull-UP

J19	DESCRIPTION
Installed	Pull-Up 10K resistor to +24V is connected to the InputS on **CN23 pin3**. (HI >15V or Open, LO< 5V or GND)
Open[1]	Pull-Up is disabled. (HI >15V, LO< 5V or Open)

[1] ***Note:*** *Factory default settings*

J20 – Reserved

J20	DESCRIPTION
Installed	Reserved. Do not install.
Open[1]	

[1] ***Note:*** *Factory default settings*

J12, J13 Encoder T, J14, J15 Encoder R, J16, J17 Encoder Z – Encoder type

J12, J14, J16	J13, J15, J17	DESCRIPTION
2 – 3	Open	Quadrature Encoder type selected on EncoderT, EncoderR or EncoderZ
1 – 2	Installed[1]	Serial Absolute Encoder type selected on EncoderT, EncoderR or EncoderZ

[1] ***Note:*** *Factory default settings*

LRC-431g3 / LRC-531g3 JUMPERS

J41 – Pull-UP

J41	DESCRIPTION
Installed [1]	Pull-Up 10K resistors to +24V are connected to the corresponding input on **CN45 – I/O Interface 2A**. InputV InputW (HI >15V or Open, LOW< 5V or GND)
Open	Pull-Up's are disabled. (HI >15V, LOW < 5V or Open)

[1] ***Note:*** *Factory default settings*

J42 – Pull-UP

J42	DESCRIPTION
Installed [1]	Pull-Up 10K resistors to +24V are connected to the corresponding input on **CN46 – I/O Interface 2**. HomeR2 SensorA2 SensorB2 (HI >15V or Open, LOW< 5V or GND) SensorC2 SensorD2
Open	Pull-Up's are disabled. (HI >15V, LOW < 5V or Open)

[1] ***Note:*** *Factory default settings*

J43, J44 Encoder R2, J51, J52 Encoder R3 – Encoder type

J43, J51	J44, J52	DESCRIPTION
2 – 3	Open	Quadrature Encoder type selected on EncoderR2 or EncoderR3
1 – 2	Installed[1]	Serial Absolute Encoder type selected on EncoderR2 or EncoderR3

[1] ***Note:*** *Factory default settings*

LRC-331g3 ARCHITECTURE

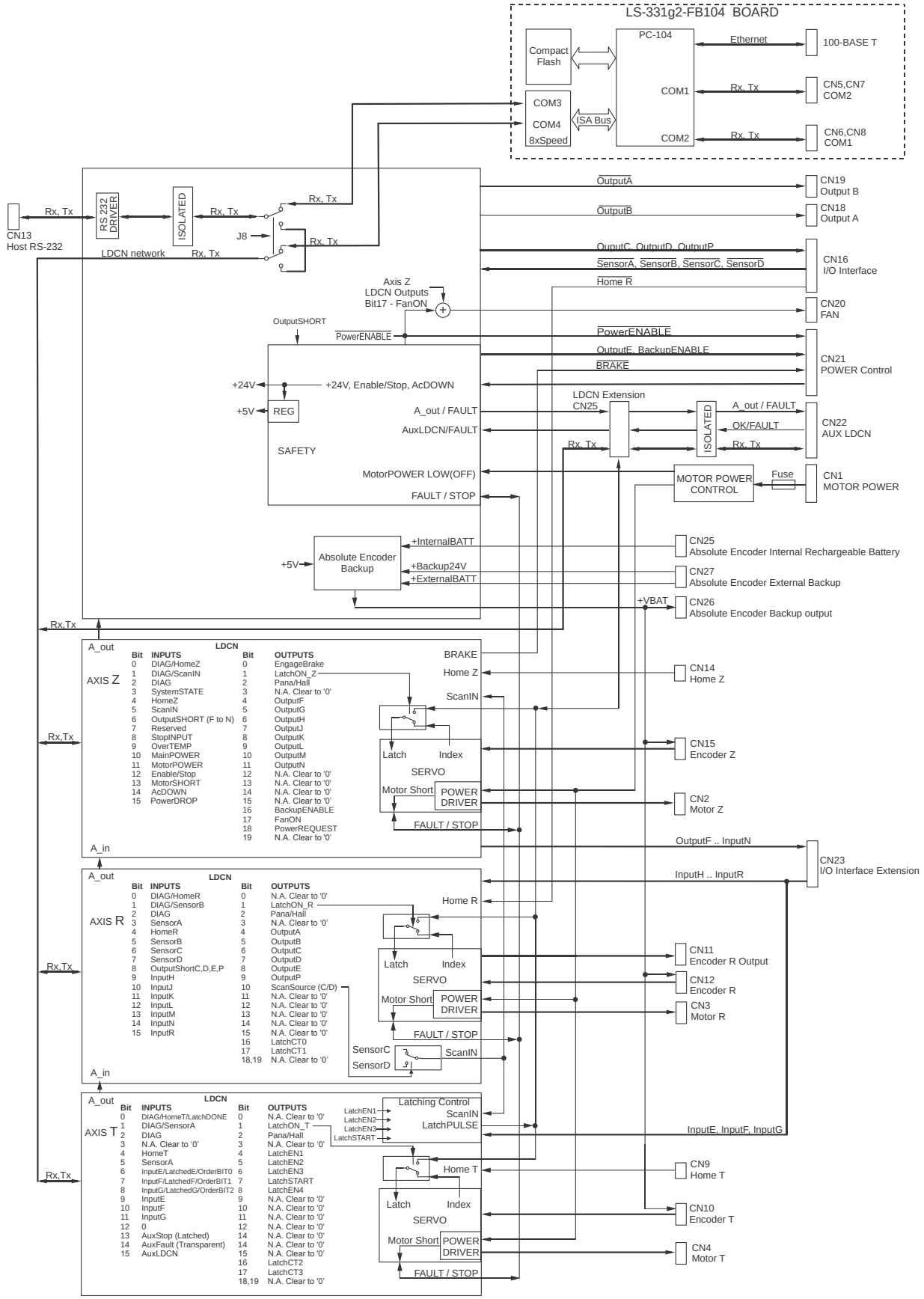

LRC-331g3 Block diagram

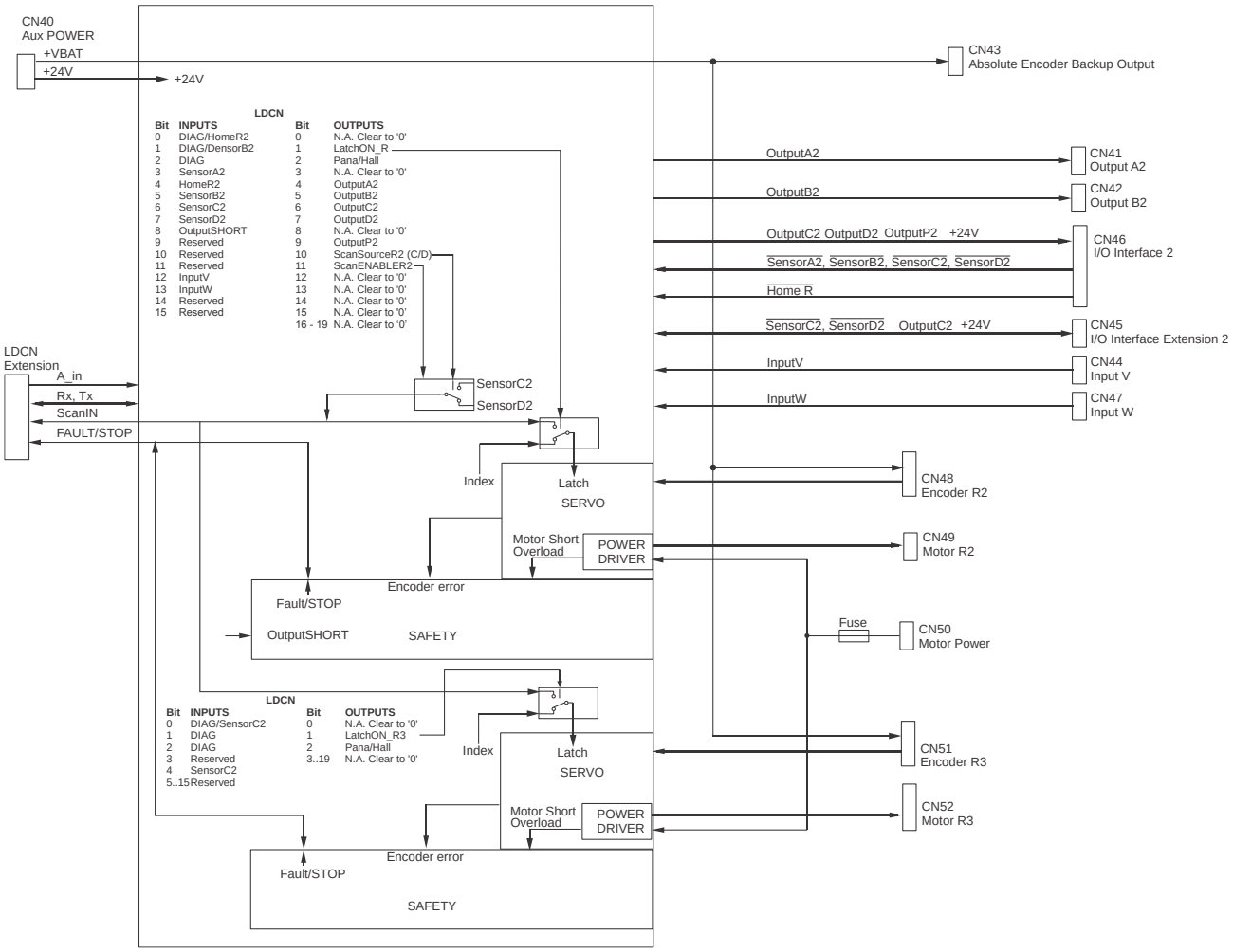

LRC-431g3 / LRC-531g3 Extension board Block diagram

LDCN I/O Map - Inputs

Input bit	Axis T	Axis R	Axis Z	Axis R2 [1]	Axis R3 [1]
0/Status bit5	DIAG/HomeT/LatchDONE	DIAG/HomeR	DIAG/HomeZ	DIAG/HomeR2	DIAG/SensorC2
1/Status bit6	DIAG/SensorA	DIAG/SensorB	DIAG/ScanIN	DIAG/SensorB2	DIAG
2/Status bit3	DIAG	DIAG	DIAG	DIAG	DIAG
3	Reserved	SensorA[2]	SystemSTATE	SensorA2	Reserved
4	HomeT	HomeR	HomeZ	HomeR2	SensorC2
5	SensorA	SensorB[2]	ScanIN	SensorB2	Reserved
6	LatchIN1/LatchedE/OrderBIT0[3]	SensorC[2]	OutputSHORT (F,G,H,J,K,L,M,N)	SensorC2	Reserved
7	LatchIN2/LatchedF/OrderBIT1[3]	SensorD[2]	Reserved	SensorD2	Reserved
8	LatchIN3/LatchedG/OrderBIT2[3]	OutputSHORT (C,D,E,P)	StopINPUT	OutputSHORT (A2..D2,P2)	Reserved
9	InputE[4]	InputH[4]	OverTEMP	Reserved	Reserved
10	InputF[4]	InputJ[4]	MainPOWER	Reserved	Reserved
11	InputG[4]	InputK[4]	MotorPOWER	Reserved	Reserved
12	InputS[4]	InputL[4]	Enable/Stop	InputV	Reserved
13	AuxSTOP (Latched) 1 = device stopped	InputM[4]	MotorSHORT	InputW	Reserved
14	AuxFAULT (Transparent) 1 = device fault	InputN[4]	AcDOWN	Reserved	Reserved
15	AuxLDCN 1 = device is present	InputR[4]	PowerDROP	Reserved	Reserved

[1] ***Note:*** *Only when axis is installed*
[2] ***Note:*** *SensorA..D returns '1' when pin is LOW*
[3] ***Note:*** *OrderBIT2..0 and LatchDONE are available only when LatchEN1/EN2/EN3 are !*='000' and LatchSTART ='1'
[4] ***Note:*** InputE..W returns '1' when pin is HIGH

LDCN I/O Map - Outputs

Output bit	Axis T	Axis R	Axis Z	Axis R2 [1]	Axis R3 [1]
0	N.A. Clear to '0'	N.A. Clear to '0'	EngageBRAKE 1= BRAKE engaged 0= BRAKE is following AE * /SystemSTATE	N.A. Clear to '0'	N.A. Clear to '0'
1	LatchON_T	LatchON_R	LatchON_Z	LatchON _R2	LatchON _R3
	Position Latching source select 0= Encoder Index 1= Sensor position latching – see Latch Control table below				
2	0= Panasonic A and S series motors with quadrature incremental encoder 1= Brushless motor with Hall sensors and differential index. Wire the Enc –Z signal to pin6				
4	LatchEN1[5]	OutputA (ON|OFF) [6]	OutputF	OutputA2	N.A. Clear to '0'
5	LatchEN2[5]	OutputB (ON|OFF) [6]	OutputG	OutputB2	N.A. Clear to '0'
6	LatchEN3[5]	OutputC (ON|OFF) [6]	OutputH	OutputC2	N.A. Clear to '0'
7	LatchSTART	OutputD (ON|OFF) [6]	OutputJ	OutputD2	N.A. Clear to '0'
8	LatchEN4[5]	OutputE (ON|OFF)	OutputK	N.A. Clear to '0'	N.A. Clear to '0'
9	N.A. Clear to '0'	OutputP (ON|OFF) [6]	OutputL	OutputP2	N.A. Clear to '0'
10	N.A. Clear to '0'	ScanSOURCE 0= SensorD 1= SensorC	OutputM	ScanSourceR2 0 = SensorD2 1 = SensorC2	N.A. Clear to '0'
11	N.A. Clear to '0'	N.A. Clear to '0'	OutputN	ScanEnableR2 Enables latching on the selected input (SensorC2 or D2) on all (T, R, Z, R2) system axes. LatchEN ='000' and LatchScan ='1' on the Axis T must be set first.	N.A. Clear to '0'
12,13,14,15	N.A. Clear to '0'	N.A. Clear to '0'	N.A. Clear to '0'	N.A. Clear to '0'	N.A. Clear to '0'
16	LatchCT2	LatchCT0	BackupENABLE (ON|OFF) 1= Battery backup enabled. 0= Battery switched OFF.	N.A. Clear to '0'	N.A. Clear to '0'
17	LatchCT3	LatchCT1	FanON EEPROM=0 Fan=MotorPOWER+FanON EEPROM=1 Fan= FanON	N.A. Clear to '0'	N.A. Clear to '0'
18	N.A. Clear to '0'	FaultOut EEPROM = 1 OutputE = /SystemSTATE EEPROM = 0 OutputE = Output bit8	PowerREQUEST 0->1= Switch the Motor power ON. 0= Turns the Motor power OFF.	N.A. Clear to '0'	N.A. Clear to '0'
19	N.A. Clear to '0'	N.A. Clear to '0'	N.A. Clear to '0'	N.A. Clear to '0'	N.A. Clear to '0'

[5] ***Note:*** *When LatchEN1/EN2/EN3/EN4 are ='0000' and LatchSTART ='1' external latch source can be used (Axis R2 Axis)*
[6] ***Note:*** *Output pin will be switched OFF while* SystemFAULT ='1', PowerREQUEST = '0' or Enable/Stop input is Low

Latching Control

LatchCT				LatchSTART	LatchEN				Description
3	2	1	0		4	3	2	1	
0	0	0	0	0	0	0	0	0	Scanning on SensorC or SensorD is selected.
				1	0	0	0	0	External latching is enabled (4thAxis) DIAG/HomeT/LatchDONE bit is following DIAG/HomeT state. LatchIN3..1 bits are following the selected inputs state.
				0	x	x	x	x	Latching is disabled. State machine is reset. DIAG/HomeT/LatchDONE bit is following DIAG/HomeT state. LatchIN3..1 bits are following the selected inputs state.
				1	0	0	0	1	Start scanning on LatchIN1=InputE only *
				1	0	0	1	0	Start scanning on LatchIN2=InputF only *
				1	0	1	0	0	Start scanning on LatchIN3=InputG only *
				1	0	0	1	1	Start latching on LatchIN2 and LatchIN1
				0	1	0	1	1	Dual latching on LatchIN2 and LatchIN1
				1	0	1	1	0	Start latching on LatchIN3 and LatchIN2
				1	0	1	0	1	Start latching on LatchIN3 and LatchIN1
				1	0	1	1	1	Start latching on LatchIN3, LatchIN2 and LatchIN1
0	1	x	x	-	-	-	-	-	LatchIN3=InputE
1	0	x	x	-	-	-	-	-	LatchIN3=InputF
1	1	x	x	-	-	-	-	-	LatchIN3=InputG
x	x	0	0	-	-	-	-	-	LatchIN2=N.A., LatchIN1=(SensorC | SensorD)
x	x	0	1	-	-	-	-	-	LatchIN2=InputJ, LatchIN1=InputH
x	x	1	0	-	-	-	-	-	LatchIN2=InputL, LatchIN1=InputK
x	x	1	1	-	-	-	-	-	LatchIN2=InputN, LatchIN1=InputM

Notes: *(*) Pulses are generating on both edges (scanning). LatchDONE is set on the first edge.*

LED's Diagnostics

YELLOW (LD2)	GREEN (LD3)	RED (LD4)	CONDITION
OFF	OFF	ON	Power-UP, LDCN not initialized.
OFF	ON	OFF	LDCN initialized, Motor power is OFF
ON	ON	OFF	Ready, Motor power is ON
ALTERNATE	ON	ALTERNATE	Enable/Stop input is Low
ON	ON	ON	Axis Servo Fault
OFF	ON	ON	Motor power missing

LDCN Axis Diagnostics

Status Bit 6 Limit 2	Status Bit 5 Limit 1	Status Bit 4 Pos_error	Status Bit 3 Power_on	Status Bit 0 Move_done	Auxiliary Bit 2 Servo_on	Auxiliary Bit 0 Index	Stop Cmd Bit 0 DSP_AE	CONDITION	BRAKE (Motor Z only)
1	1	X	1	1	0	1	0	AxisOFF	Engaged
Input	Input	0	1	X	1	Encoder	1	ServoON	Released if EngageBRAKE = 0
					0			ServoOFF	
X	X	X	X	1	0	0	0	ErrHALL	Engaged
X	X	X	X	0	0	1	0	ErrEEPROM	
1	0	X	1	1	0	1	0	SystemSTOP *	
0	1	1	0	1	0	1	0		
0	1	1	0	1	0	1	1	MotorShort	
1	0	1	0	1	0	1	1	SystemFAULT *	
1	1	1	0	1	0	1	1		
0	0	1	0	1	0	1	1	OverLOAD	
1	0	1	0	1	0	0	1	EncoderERROR	
X	X	1	1	1	0	X	1	PositionERROR	

Notes: *(*) SystemSTOP – Axis is disabled by other event or axis.*
SystemFAULT – Axis was enabled, and then stopped by other event or axis.

Encoder and Commutator interface

Incremental Encoder interface accepts two square wave differential inputs -> Enc +A, Enc -A, Enc +B and Enc -B. Ideally these square waves are 50% duty cycle and +/-90 degrees out of phase. The time between encoder state transitions is limited and should not be less than 0.1µS. With ideally formed encoder pulses, this would correspond to a 2,500 line encoder (10,000 counts/rev) rotating at 60,000 rpm. Encoder Index (Enc +Z and Enc –Z/H3 for P-Mode) is used by Servo control module to capture Home position.
Hall sensors provide the motor position. They are used by motor control module to determine motor position after power up and during the motor initialization procedure.

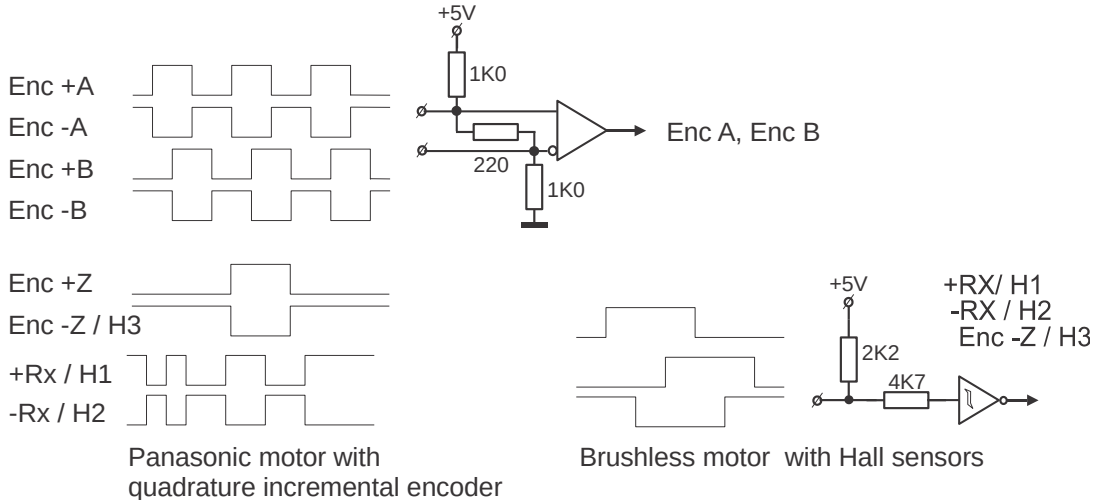

Besides the position control, encoder phases, index and hall sensors are used to determine the motor commutation. The output PWM is synchronized on every motor rotation using internal reference signal based on Hall Sensors state.

Absolute Encoder interface uses one RS-485 bi-directional line (Enc +A, Enc -A) for communicating with the encoder. The controller transmits the commands to the encoder and receives absolute position data. By connecting backup battery to the controller, absolute position could be kept when the main power supply is off.

I/O Control Interface

Inputs

Home T, Home R, Home Z and Home R2 inputs can be read from the corresponding LDCN Diagnostic - Status Bit5 when servo is ON. Any fault condition will override those bits with axis diagnostic status.
Alternatively they can be read from LDCN Inputs - Input Bit4.
Home T, Home Z, Home R and Home R2 can be used as general purpose inputs, limit switches or as Home inputs. Read as “1” when inputs is LOW (<1.5V)

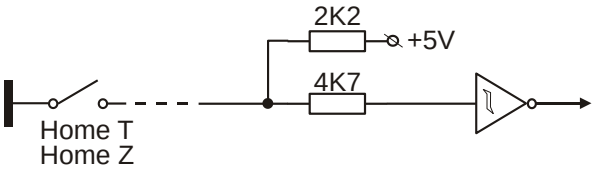

Home T and Home Z inputs

Home R and Home R2 have different input schematics (Refer to Inputs description section) but the same functionality as Home T and Home Z.

Inputs description

SensorA - SensorD, SensorA2 - SensorD2 (Extension board), InputE - InputR, InputV and InputW (Extension board) are general purpose inputs. SensorA, SensorB, SensorC or SensorD can be read from LDCN Inputs – AxisT Input Bit3, Bit5, Bit6, Bit7. All other inputs are read as LDCN inputs (refer to LDCN I/O map).

By default:

- SensorA..D, Home R, SensorA2..D2 and Home R2 are configured as active LOW inputs. Corresponding J7 and J42 jumpers are installed and 10K pull-up resistor to +24V is connected to the input. Read as “1” when inputs is LOW (<5V)
- InputE .. W are configured as Active HIGH inputs and corresponding J10 and J41 jumpers are open. Read as “1” when inputs is HIGH (>15V)

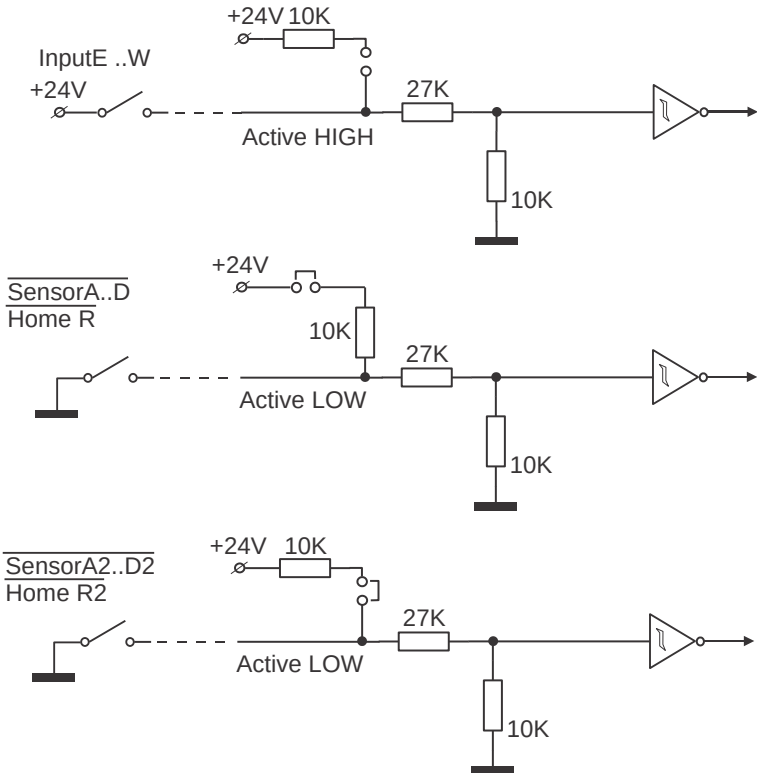

Inputs, Home R and Home R2 schematics

Enable/Stop is an active HIGH (+24V) input.

The status of this input can be read from LDCN AxisZ Input Bit 8. Latched input state on SystemSTATE bit rising edge can be read from LDCN Axis Z Input Bit 12.

When Enable/Stop is LOW (open) SystemSTATE bit will be set and all servo axes will be disabled. Servo dependant outputs - OutputA..D, OutputP, PowerENABLE, OutputA2..D2 and OutputP2 will be disabled too. To restore the normal operation and clear SystemFAULT bit – Enable/Stop input must be connected to +24V and then a 0 to 1 transition on PowerREQUEST bit must be made.

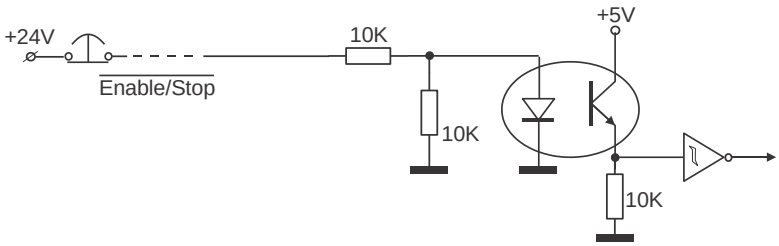

Enable/Stop input schematics

Outputs

LRC-331g3 / LRC-431g3 / LRC-531g3 are equipped with open collector and source outputs:

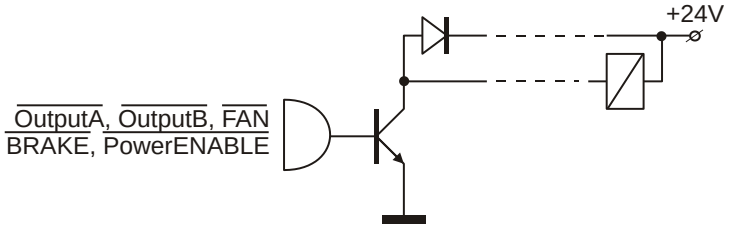

Open collector output schematics

All open collector outputs are equipped with clamp diodes connected to +24V and are short protected.

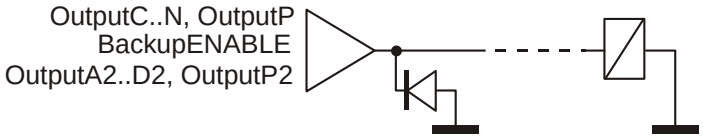

Source output schematics

All source outputs are equipped with clamp diodes and short protection.

All outputs are OFF after power-up.

OutputA, OutputB, OutputC, OutputD OutputE and OutputP are controlled by AxisR Output Bit4 to Bit9. Those outputs will be disabled when PowerREQUEST bit is cleared, or En/Stop input is open, or when any other fault condition is present (SystemSTATE bit is set).
OutputE and BackupENABLE will be disabled only when OutputSHORT (C,D,E,P) bit is active.
Normal operation after output short can be restored after updating this outputs group.

OutputF, OutputG, OutputH, OutputJ, OutputK, OutputL, OutputM, OutputN are controlled by the data written in Axis Z LDCN Outputs Bit4, Bit5, Bit6, Bit7, Bit8, Bit9, Bit10, Bit11. The outputs will be disabled only when OutputSHORT(F..N) bit is set. Normal operation after output short can be restored after updating this outputs group in Axis Z.

OutputA2, OutputB2, OutputC2, OutputD2 and OutputP2 are controlled by the data written in Axis R2 LDCN Outputs Bit4, Bit5, Bit6, Bit7 and Bit9. The outputs will be disabled when OutputSHORT (A2..D2,P2) bit is set or Enable/Stop input is open, or when any other fault condition is present (SystemSTATE bit is set). Normal operation after output short can be restored after updating this outputs group in Axis R2.

BRAKE Output is controlled by the Axis Z servo status according to LDCN Diagnostic table and LDCN I/O map. If SmartSTOP functionality is enabled the servo controller will automatically hold the motor until brake is mechanically engaged.

SAFETY features

If one of the axes (**T**, **R**, **Z** or **R2, R3**) is in Fault State, the corresponding Axis Diagnostic status code will be issued (refer to LDCN Diagnostic table) and internal system FAULT line will be activated. The SystemSTATE bit will be set and all axes will be disabled thru the internal STOP and A_out/FAULT lines. All outputs except OutputE to OutputN, BackupENABLE and PowerENABLE will be disabled. To restore the normal operation all axes must be disabled with Stop command Bit 0=0 first.

MotorSHORT will be activated when one of the motor outputs is shorted, MotorSHORT and SystemSTATE bit will be set to 1 and all axes will be disabled thru the internal STOP and A_out/AuxSTOP lines. All outputs except OutputE, BackupENABLE and PowerENABLE will be disabled. The corresponding Axis Diagnostic status will be issued and all other axes will be disabled trough A_out/AuxSTOP line.

Enable/Stop input must be HIGH (+24V) to enable the controller. When LOW (open) StopINPUT, Enable/Stop and SystemSTATE bits will be set to 1. OutputA..OutputD, OutputP, PowerENABLE outputs and all servo axes will be disabled.
To restore the normal operation this input must be connected to +24V source and then a 0 to 1 transition on PowerREQUEST bit is reqquired.

Under voltage protection will be activated if Motor power supply voltage is lower than 50Vdc. When undervoltage is detected MotorPOWER and PowerDROP bits will be cleared. SystemSTATE bits will be set to 1. OutputA..OutputD, OutputP, PowerENABLE, FAN outputs and all servo axes will be disabled thru the internal STOP and A_out/AuxSTOP lines.
To resume the operation, power supply voltage must be above 60V.

Source Outputs are overload protected.
If an output current exceeds a predefined limit, all outputs in that group will be shut down and then restored automatically. If this ON / OFF cycle is repeated for more that 0.5s continuously, the corresponding outputs group OutputSHORT bit will be set and they all will be disabled. SystemSTATE bit will be set too, stopping and disabling all axes servo. This cycle will allow a capacitive load to be switched without generating a servo fault, but all other outputs in that group will be disabled until the capacitor is charged. To connect a capacitive load without tripping the outputs current limit, install a resistor 22 Ohm / 2W in series on that output.

Output Groups	Group Overload status bit	
OutputC, OutputD, OutputE, OutputP, BackupENABLE	OutputSHORT (C,D,E,P)	AxisR Input Bit8
OutputF, OutputG, OutputH, OutputJ, OutputK, OutputL, OutputM, OutputN	OutputSHORT (F,G,H,J,K,L,M,N)	AxisZ Input Bit6
OutputA2, OutputB2, OutputC2, OutputD2, OutputP2	OutputSHORT (A2..D2,P2)	AxisR2 Input Bit8

Open Collector Outputs OutputA, **OutputB**, **BRAKE**, **PowerENABLE** and **FAN** are overload protected. The outputs values will be restored automatically if the overload is removed.

LRC-331g3 Panasonic quadrature incremental encoders wiring sample application

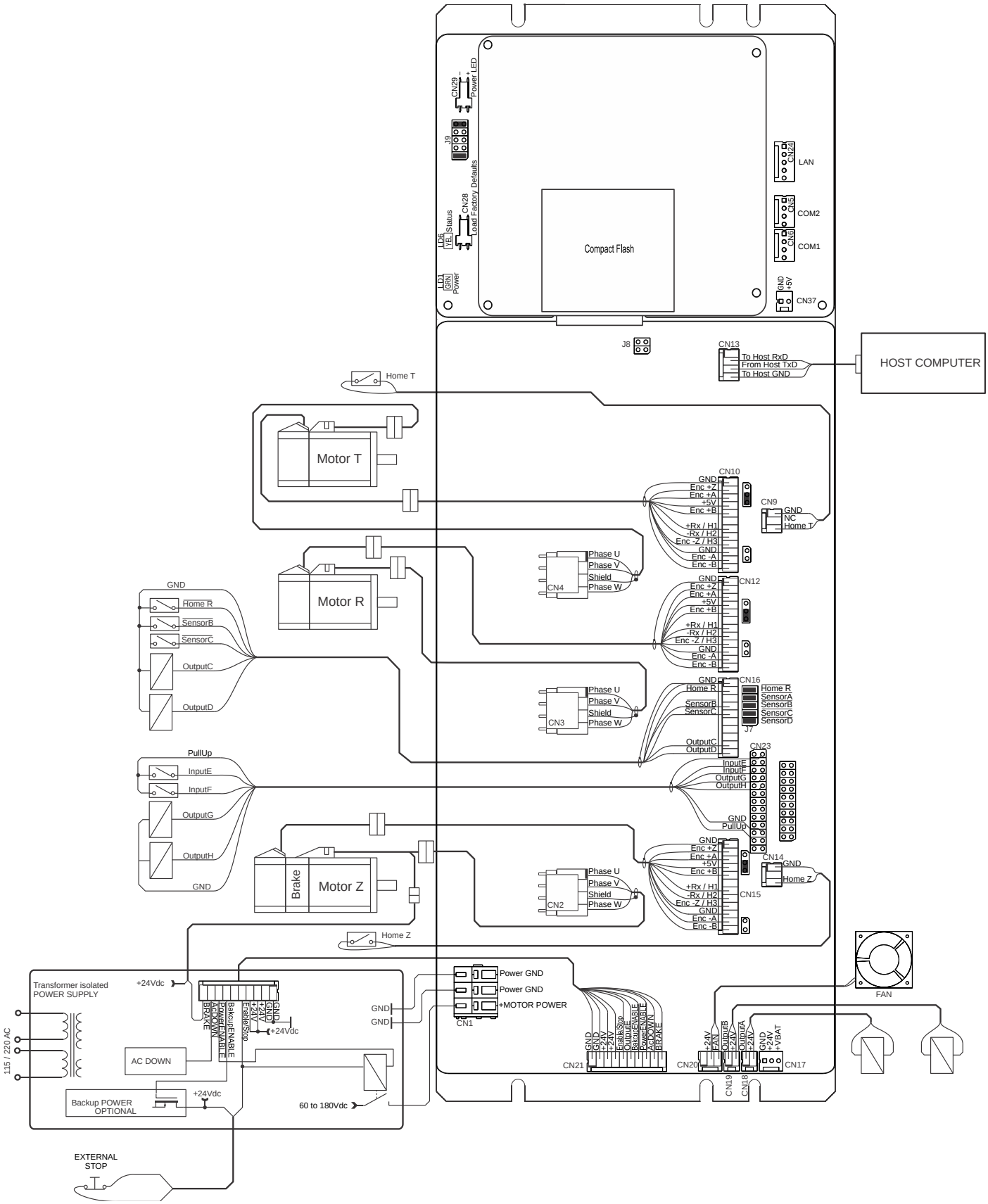

LRC-531g3 Panasonic quadrature incremental encoders wiring sample application

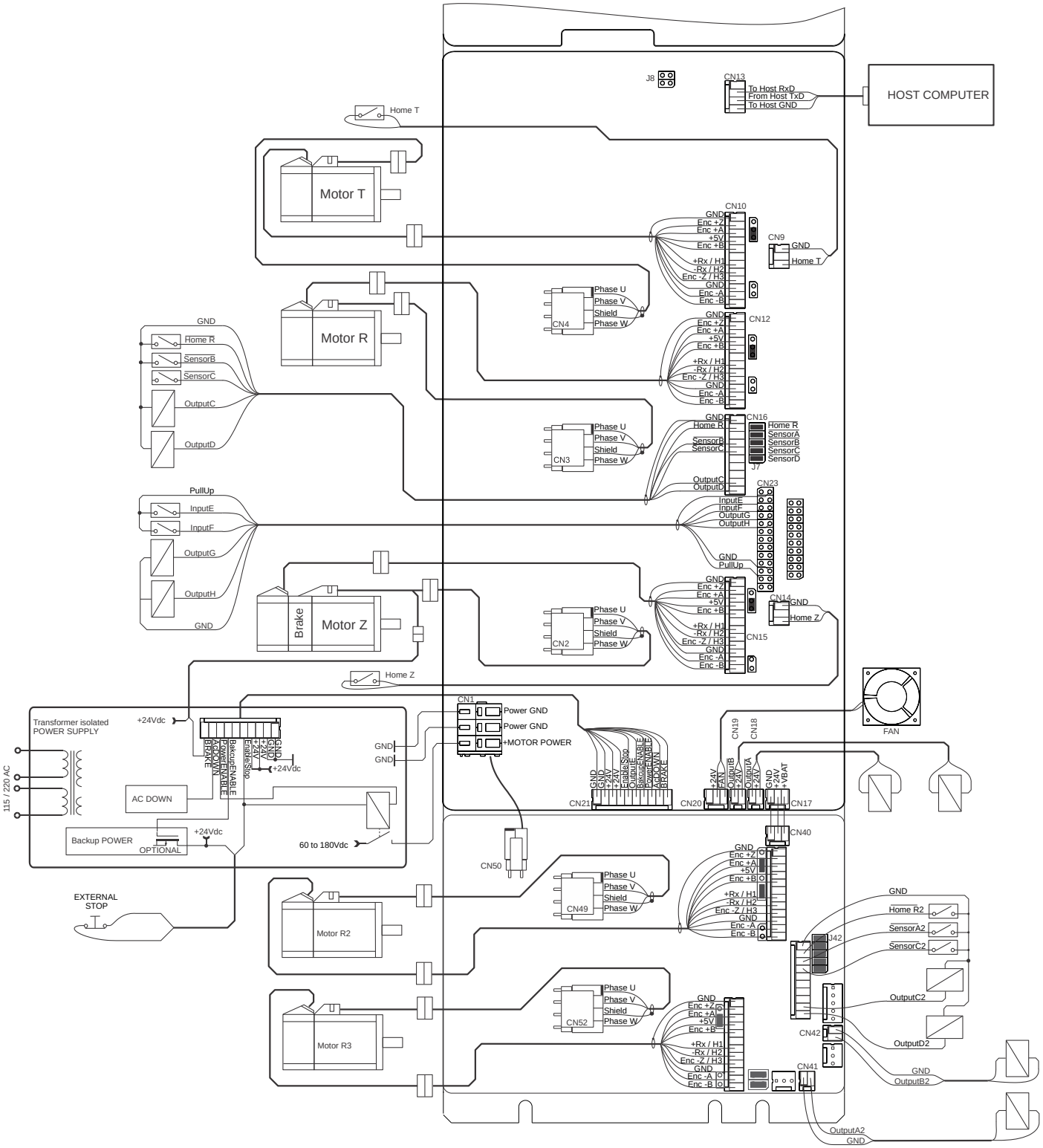

LRC-531g3 Panasonic Absolute encoder wiring sample application

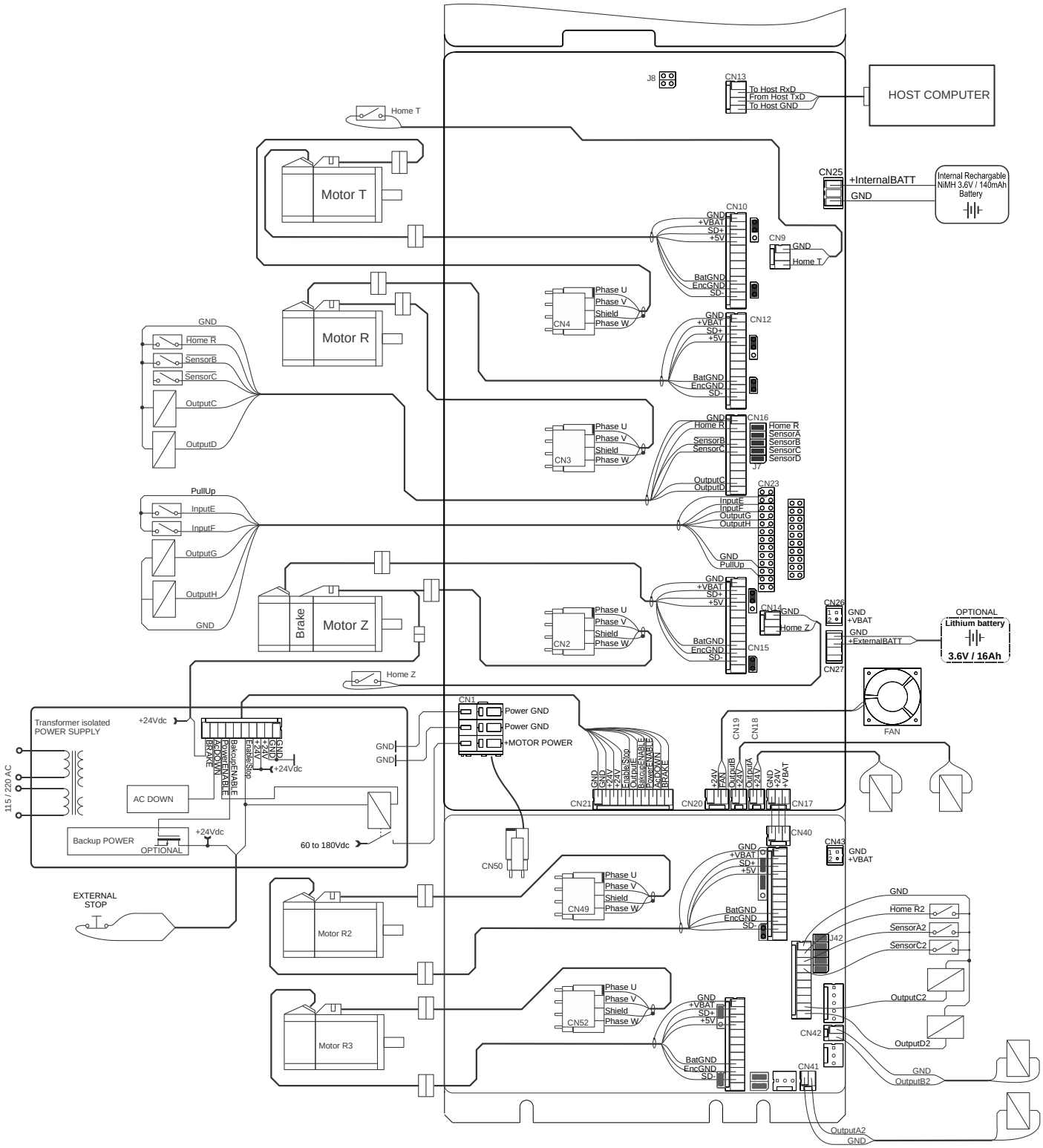

LRC-331g3 wiring sample application for wafer handling robots

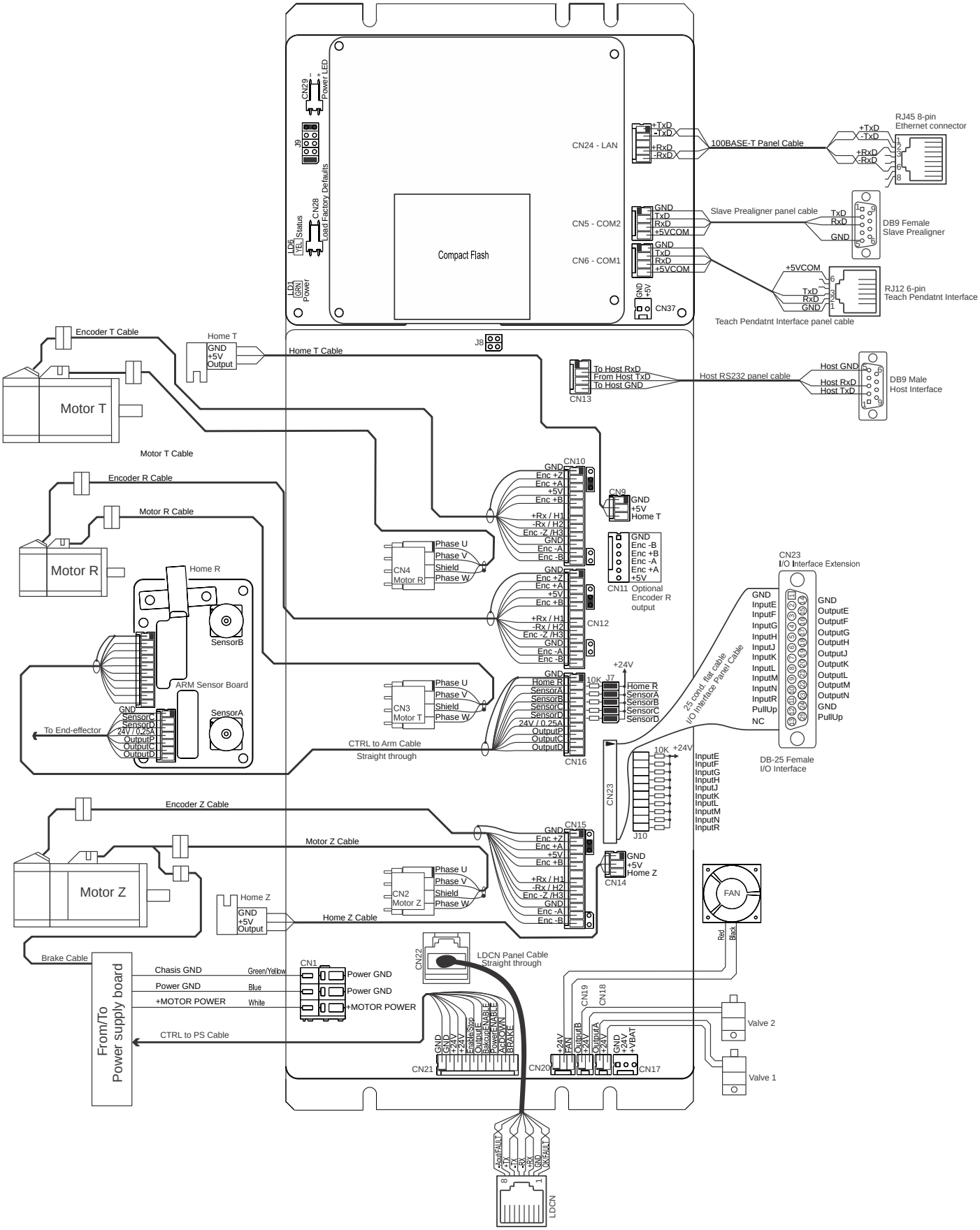

LRC-431g3 wiring sample application for dual arm wafer handling robots

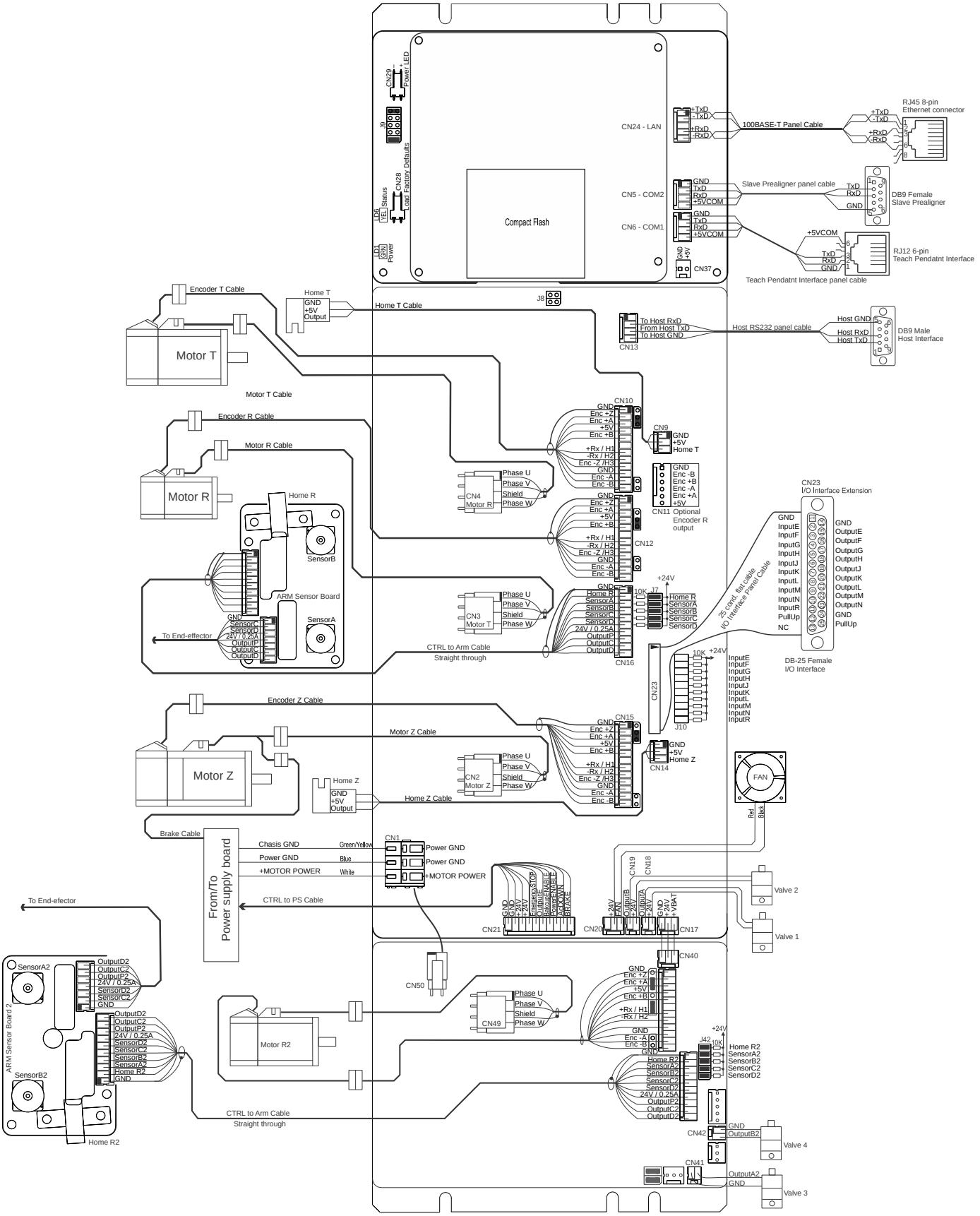

LRC-331g3 power supply wiring sample application for wafer handling robots

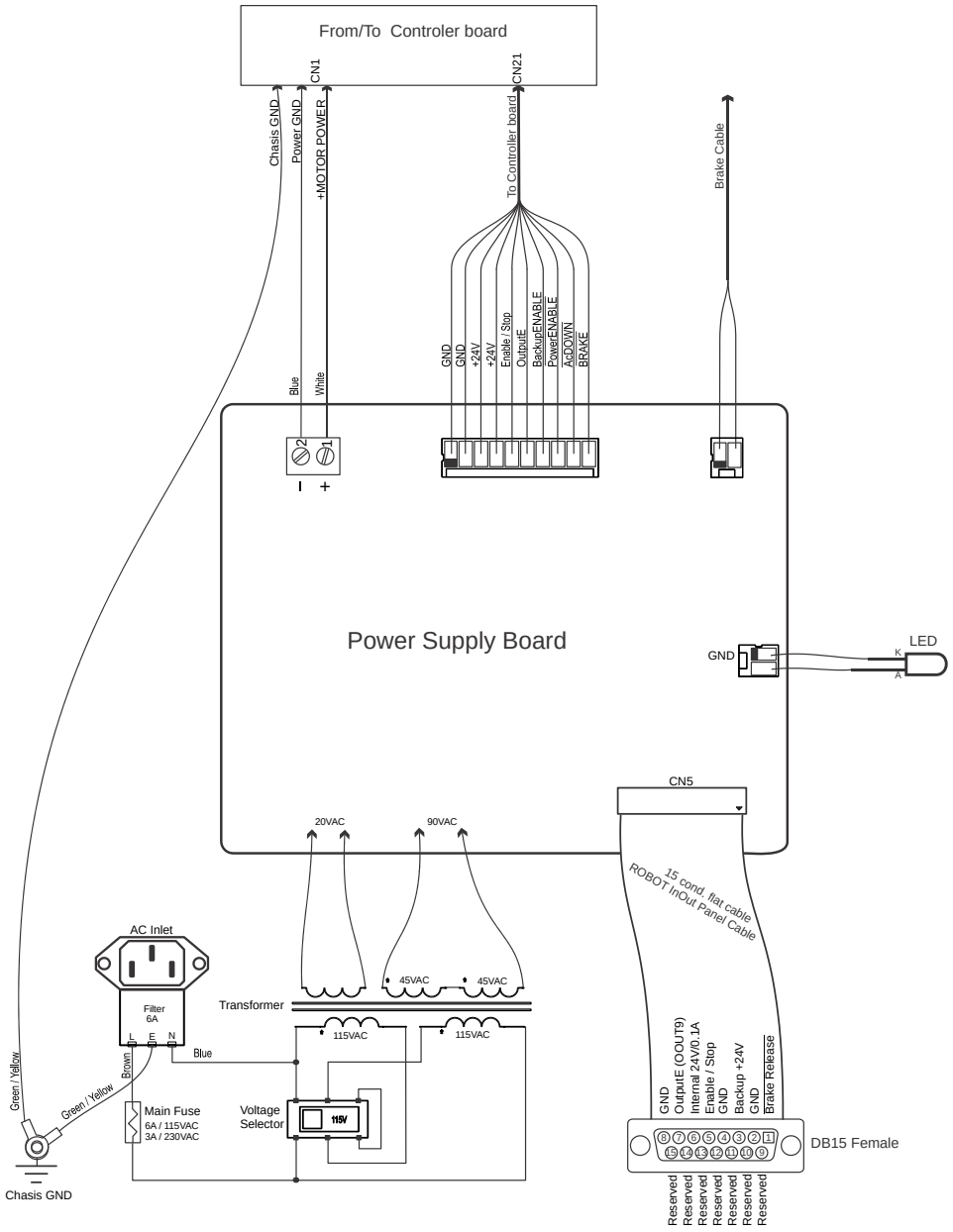

PANASONIC A and S motors with incremental encoder wiring diagram

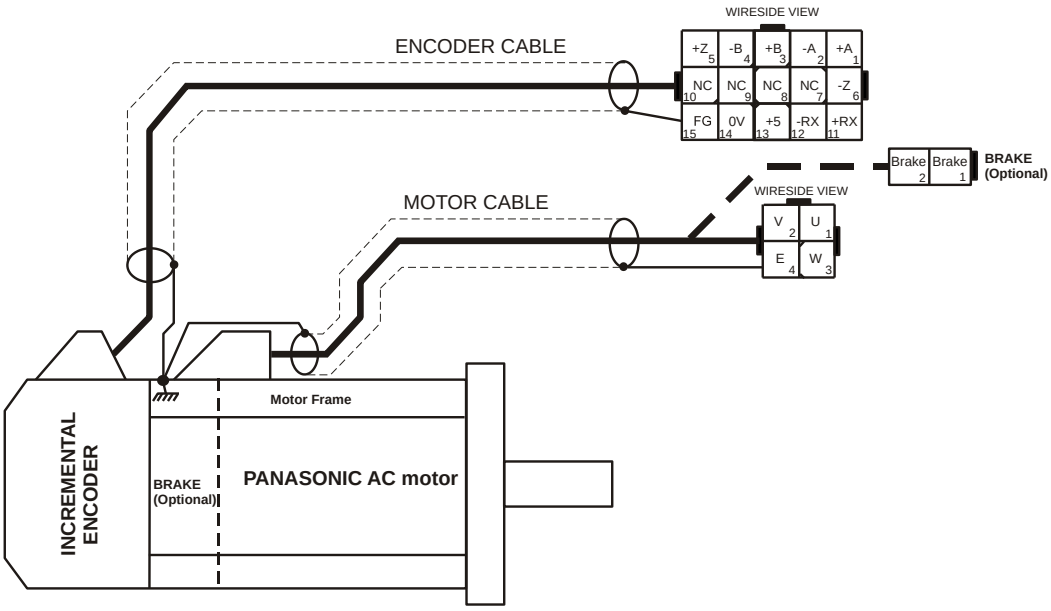

ENCODER CONNECTOR		
PIN#	SIGNAL NAME	WIRE COLOR
1	+ A channel output	Red
2	- A channel output	Pink
3	+ B channel output	Green
4	- B channel output	Blue
5	+ Z channel output	Yellow
6	- Z channel output	Orange
7	NC	NA
8	NC	NA
9	NC	NA
10	NC	NA
11	+RX	Light blue
12	-RX	Violet
13	+5V	White
14	0V	Black
15	FG = motor frame	Black

MOTOR CONNECTOR		
PIN#	SIGNAL NAME	WIRE COLOR
1	U phase	Red
2	V phase	White
3	W phase	Black
4	E = motor frame	Green/yellow

PANASONIC A and S series motors with absolute encoder and 15 pin connector wiring diagram

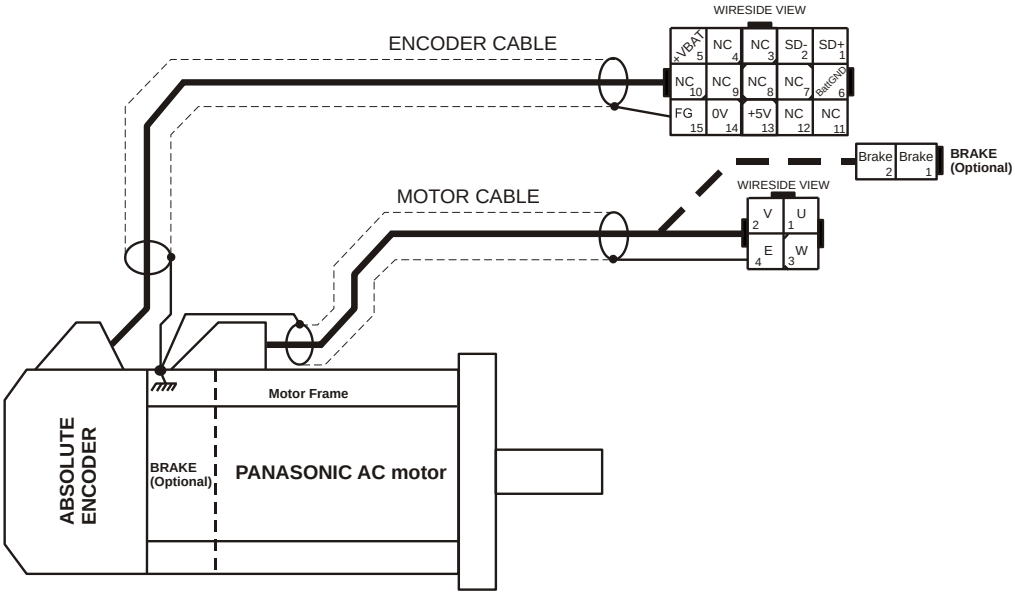

ENCODER CONNECTOR		
PIN#	SIGNAL NAME	WIRE COLOR
1	SD+	Blue
2	SD-	Violet
3	NC	NA
4	NC	NA
5	+VBAT	Red
6	BattGND	Pink
7	NC	NA
8	NC	NA
9	NC	NA
10	NC	NA
11	NC	NA
12	NC	NA
13	+5V	White
14	0V	Black
15	FG = motor frame	Black

MOTOR CONNECTOR		
PIN#	SIGNAL NAME	WIRE COLOR
1	U phase	Red
2	V phase	White
3	W phase	Black
4	E = motor frame	Green/yellow

PANASONIC A and S series motors with absolute encoder and 9 pin connector wiring diagram

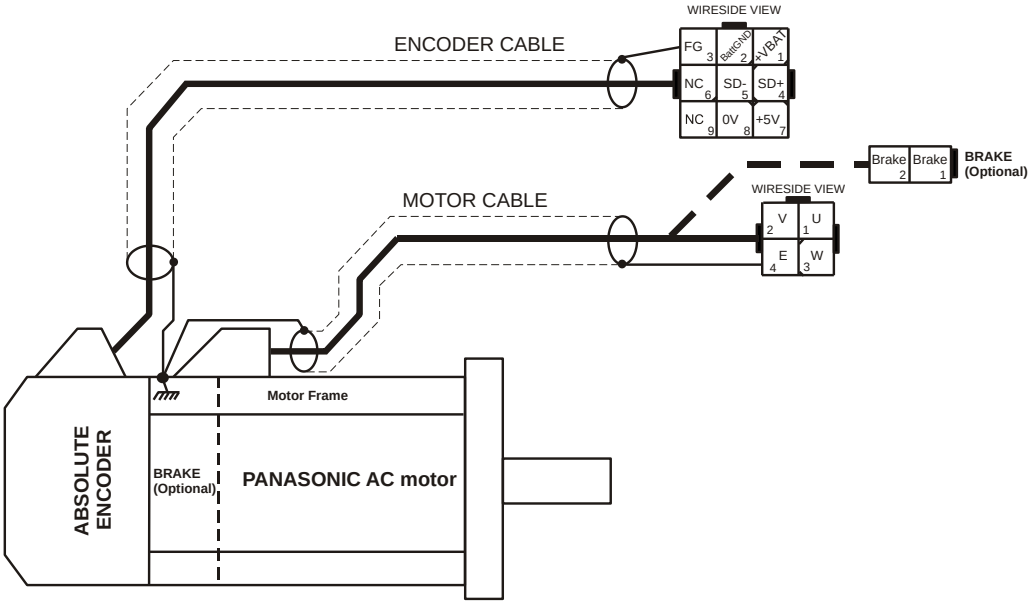

ENCODER CONNECTOR		
PIN#	SIGNAL NAME	WIRE COLOR
1	+VBAT	Red
2	BattGND	Pink
3	FG = motor frame	Black
4	SD+	Blue
5	SD-	Violet
6	NC	NA
7	+5V	White
8	0V	Black
9	NC	NA

MOTOR CONNECTOR		
PIN#	SIGNAL NAME	WIRE COLOR
1	U phase	Red
2	V phase	White
3	W phase	Black
4	E = motor frame	Green/yellow

EXTENSION CABLES for PANASONIC A and S series motors

MOTOR CABLE — To LRC-331g3 / LRC-431g3 / LRC-531g3

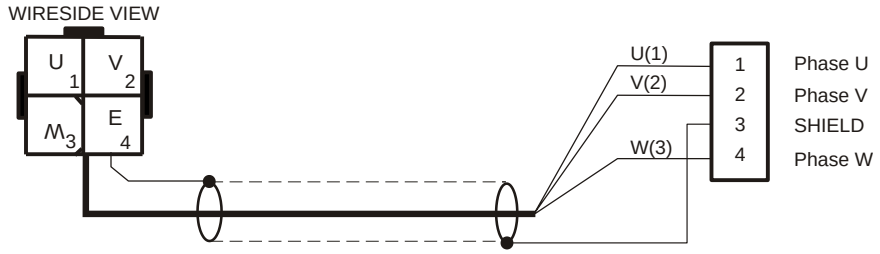

MOTOR CONNECTOR (AMP CAP 172159-1) 4 pins 170366-1		LRC-331g3 / LRC-431g3 / LRC-531g3 CONNECTOR (Molex 09-50-8043) 4 pins 08-52-0125	
PIN#	SIGNAL NAME	PIN#	SIGNAL NAME
1	U phase	1	Phase U
2	V phase	2	Phase V
3	W phase	4	Phase W
4	E=motor frame	3	SHIELD

INCREMENTAL ENCODER — To LRC-331g3 / LRC-431g3 / LRC-531g3

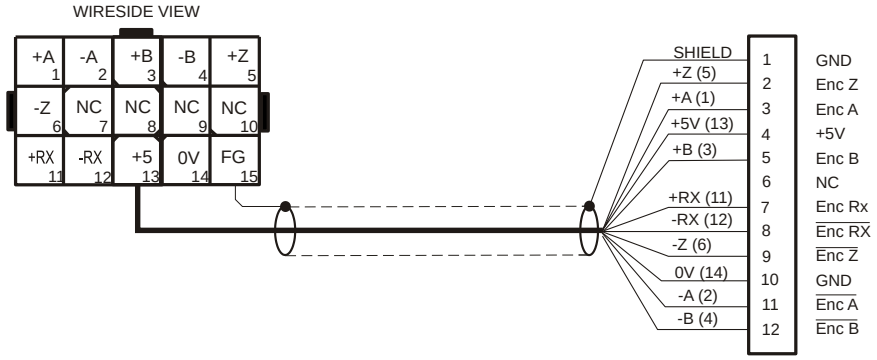

MOTOR CONNECTOR (AMP CAP 172163-1) 10 pins 170365-1		To LRC-331g3 / LRC-431g3 / LRC-531g3 CONNECTOR (MOLEX 22-01-3127) 11 pins 08-50-0114	
PIN#	SIGNAL NAME	PIN#	SIGNAL NAME
1	+ A channel output	3	Enc +A
2	- A channel output	11	Enc - A
3	+ B channel output	5	Enc +B
4	- B channel output	12	Enc - B
5	+ Z channel output	2	Enc +Z
6	- Z channel output	9	Enc – Z / H3
11	+RX	7	+RX / H1
12	- RX	8	-RX / H2
13	+5V	4	+5V
14	0V	10	GND
15	FG	1	GND (SHIELD)

ABSOLUTE ENCODER - 15 pin connector

Axis T, Axis R, Axis Z, Axis R2, Axis R3 **To LRC-331g3 / LRC-431g3 / LRC-531g3**

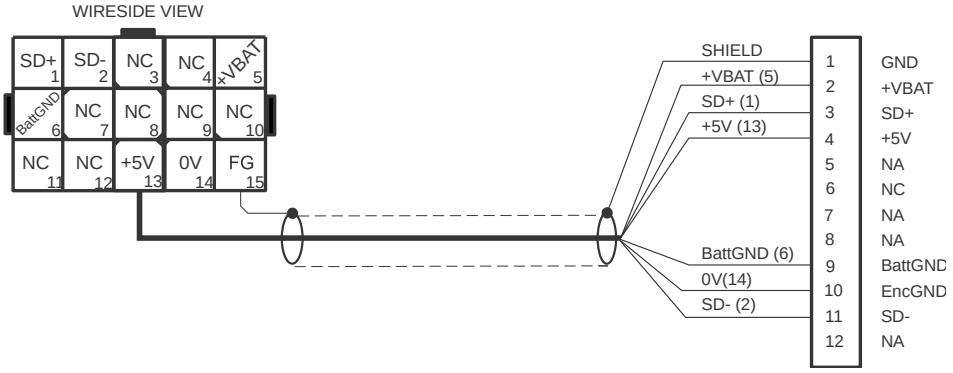

MOTOR CONNECTOR (AMP CAP 172163-1) 7 pins 170365-1		LRC-331g3 / LRC-431g3 / LRC-531g3 CONNECTOR (MOLEX 22-01-3127) 7 pins 08-50-0114	
PIN#	SIGNAL NAME	PIN#	SIGNAL NAME
1	SD+	3	SD+
2	SD-	11	SD-
5	+VBAT	2	+VBAT
6	BattGND	9	BattGND
13	+5V	4	+5V
14	0V	10	EncGND
15	FG	1	SHIELD

ABSOLUTE ENCODER - 9 pin connector

Axis T, Axis R, Axis Z, Axis R2, Axis R3 **To LRC-331g3 / LRC-431g3 / LRC-531g3**

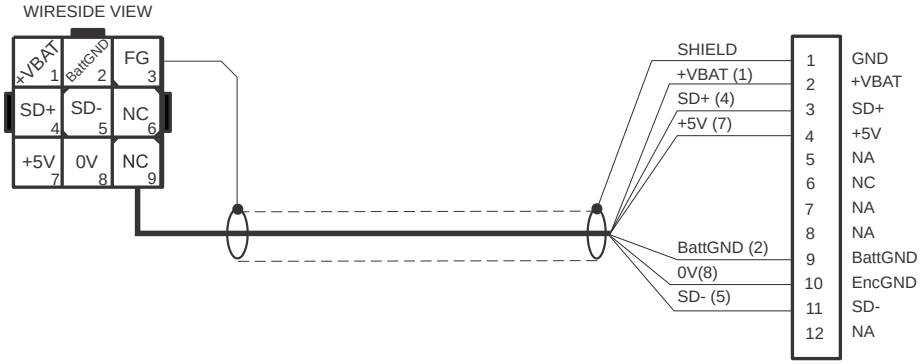

MOTOR CONNECTOR (AMP CAP 172161-1) 7 pins 170365-1		LRC-331g3 / LRC-431g3 / LRC-531g3 CONNECTOR (MOLEX 22-01-3127) 7 pins 08-50-0114	
PIN#	SIGNAL NAME	PIN#	SIGNAL NAME
1	+VBAT	2	+VBAT
2	BattGND	9	BattGND
3	FG	1	SHIELD
4	SD+	3	SD+
5	SD-	11	SD-
7	+5V	4	+5V
8	0V	10	EncGND