LOGOSOL

RELIABILITY IN MOTION

## STANDALONE EDGE HANDLING WAFER PREALIGNER

# LPA68EH-3-REHV1-S38-S(B)-R900V-NE-LH58

**Reduced contact edge handling prealigner for two wafer sizes,**
with edge contact zone of **less than 1mm**

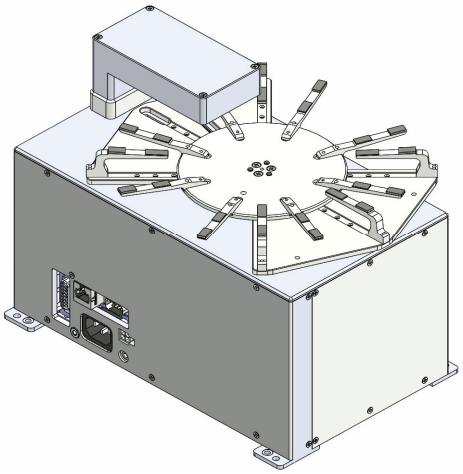

**Aligning capability:** Standard 150 and 200 mm wafers
transparent and
semi-transparent substrates

**Body:** LPA58

**Interface Entry:** side (optional bottom)

## SPECIFICATIONS

| | | |
|---|---|---|
| **Wafer Diameter** | | 150mm, 200mm |
| **Wafer Opacity** | | Transparent, Semi-Transparent, Opaque |
| **Square Substrates** | | Not Applicable |
| **Wafer Handling** | | Edge Handling |
| **Centering Accuracy (3 Sigma)** | | ±35um on the Prealigner Chuck |
| **Angular Accuracy (3 Sigma)** | **10000 CPR Encoder** | ±0.07° on the Prealigner Chuck |
| | **24000 CPR Encoder** | ±0.04° on the Prealigner Chuck |
| **Motor Axes** | | Three |
| **Host Communication** | | RS232, Ethernet |
| **Max Initial Wafer Offset** | | 6mm |
| **Body Dimensions (W x L x H)** | | 173mm x 267mm x 190mm |
| **Footprint Compatibility** | | LPA26-3, LPA58-3, LPA38-3<br>LPA4EH-3, LPA6EH-3, LPA8EH-3 |
| **Weight** | | 5.30kg |
| **Facilities Required** | | 100-240VAC, 50/60Hz, 48VA, or 24VDC/2A |
| **Flat/Notch Compatibility** | | SEMI Standards Compliant |
| **Cleanliness** | | Class 1 |
| **MTBF** | | More than 70000 hours |

NOTE: All specification values are estimated with standard flat silicon wafer

# LPA68EH-3-REHV1-S38-S(B)-R900V-NE-LH58

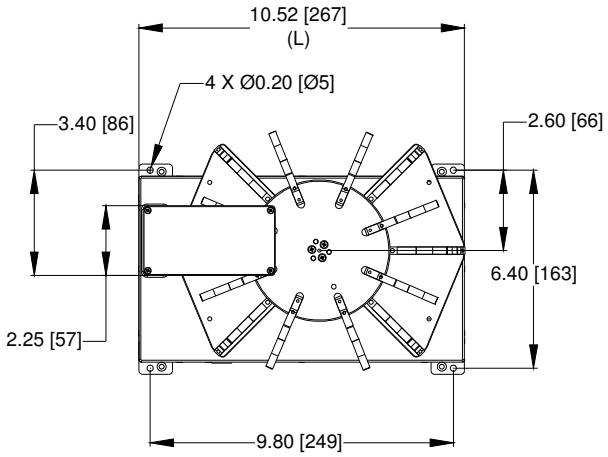


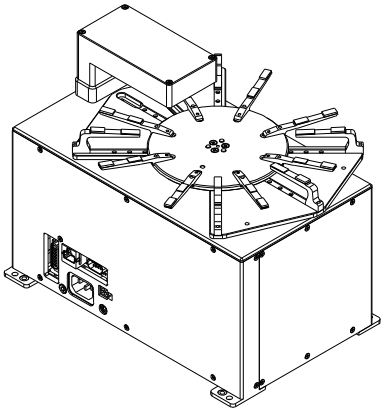

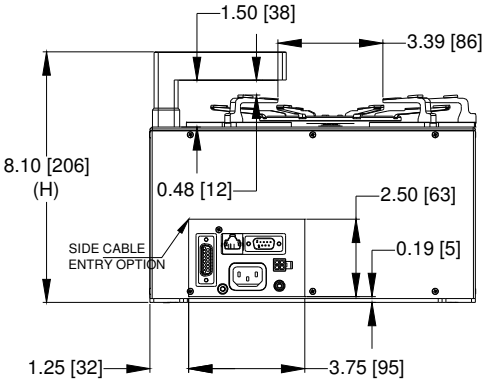


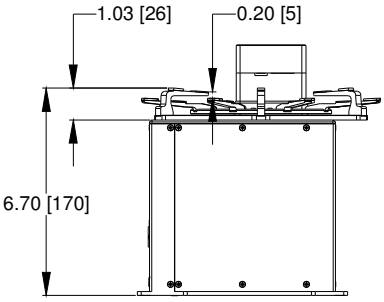


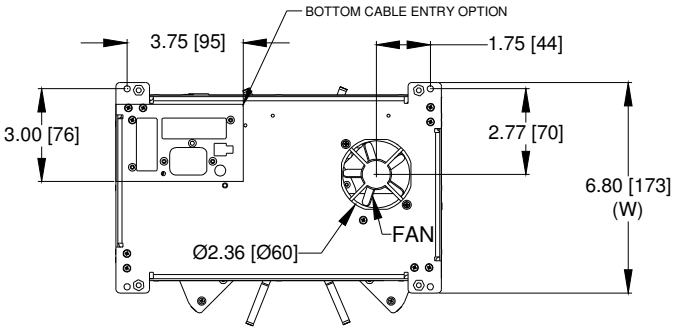


NOTE: All Dimensions — inch [mm]

For model numbers and options download: *LPA Series Prealigners Ordering Guide.pdf*